DECOLAV®

Spec Sheet

Model No. 1410 Series

Product Description

Round Vitreous China Vessel with Overflow

- Classically Redefined™ Collection
- 21" Round
- Vitreous China with Overflow
- High-Gloss Ceramic Finish
- For Above Counter Use
- CSA Certified : CSA B45.0-02, CSA B45.1-02

Roughing-in Dimensions

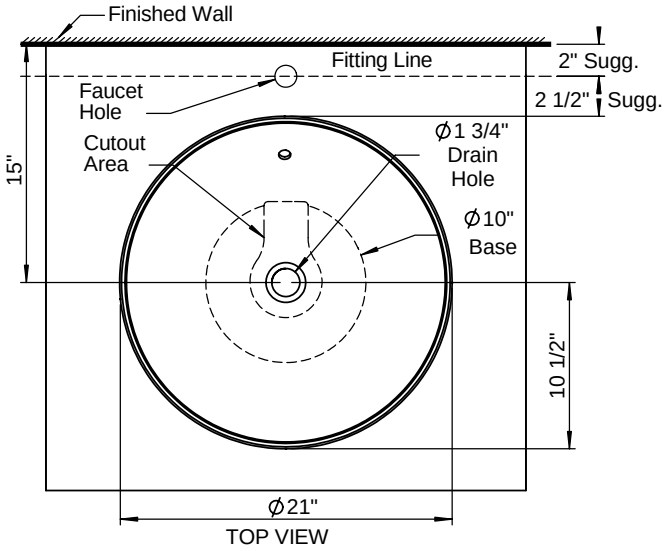

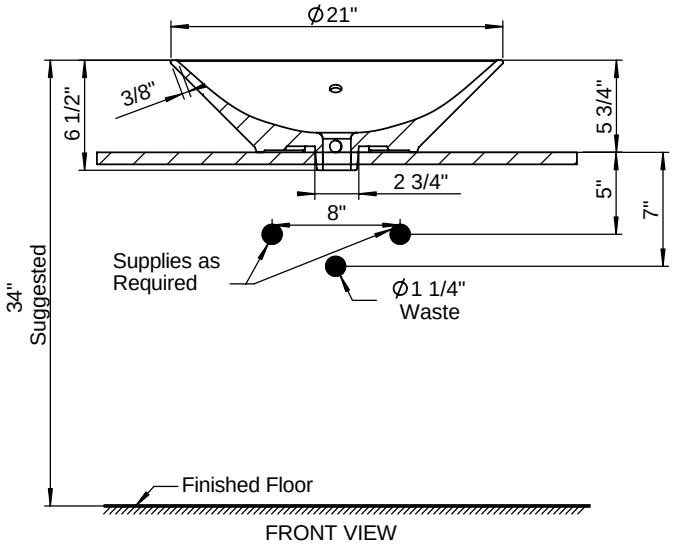

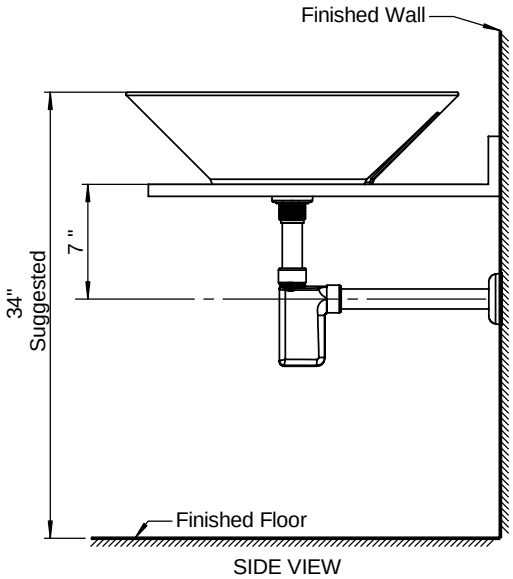

Customer Service
561-274-2110
www.decolav.com