Veris

32 194 Centerset bidet

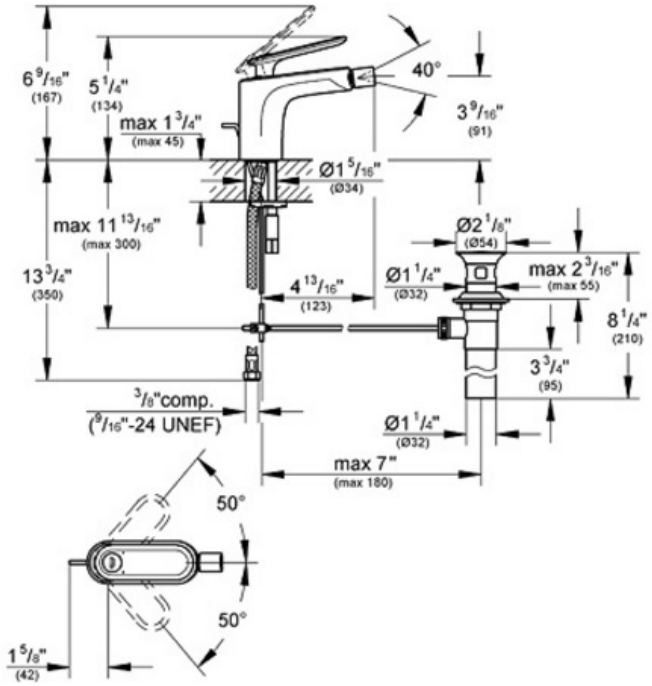

Description

Solid Brass Construction
GROHE SilkMove® Ceramic Cartridge
Metal Lever Handle
Over The Rim Swivel Spray
Stainless Steel Braided Flexible Supplies
Quick Installation System

NOTE: Velvet Black (KS0) and Moon White (LS0) are made-to-order finishes. Allow 10 - 12 weeks for delivery.

Flow Rate

2.2 gpm at 60 psi (2.5 gpm at 80 psi or 9.5 lpm)

Code Compliance

ASME/ANSI A112.18.1M
ADA Compliant

Available Finishes

000 Starlight® Chrome
KS0 Velvet Black
LS0 Moon White

GROHE America, Inc 241 Covington Drive, Bloomingdale, IL 60108 | 630-582-7711 | Fax: 630-582-7722
GROHE Canada, Inc | 1230 Lakeshore Road East, Mississauga, Ontario | Canada L5E 1E9 | 905.271.2929 | Fax: 905.271.9494