BAULOOP
Four-hole bath combination
MODEL # 19594

Pure Freude an Wasser

GROHE

GROHE America, Inc | 200 North Gary Avenue, Suite G, Roselle, IL 60172
Phone: +1 (800) 444-7643 | Fax: +1 (800) 225-2778 | us-customerservice@grohe.com

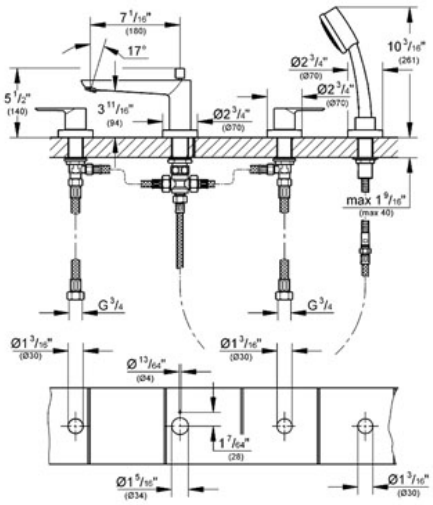

ADA

Product Description:
Four-hole bath combination

Standard Specification:
- Chrome Finish
- 3/4" ceramic cartridges (90° turn)
- Metal lever
- Hand shower New Tempesta Cosmopolitan 100, 1 spray, 2.0 gal (26 082 001)
- Bath spout with flow control and diverter
- 79" metal shower hose
- Stainless Steel Braided Flexible Supplies
- Max Flow Rate 13.2 gpm (50 L/min), 2.5 gpm (9.5 L/min) for Hand Shower

Applicable Codes & Standards:
- Energy Policy Act of 1992
- ASME A112.18.1/CSA B125.1
- US Federal and State material regulations
- ICC/ANSI A117.1

Color:
❑ 19594 000 chrome