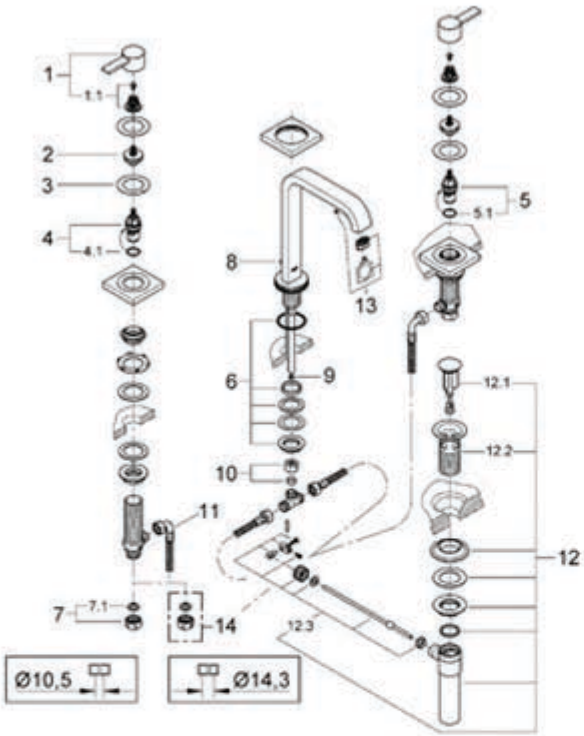

Pos.-nr.	Prod. description	Order-nr.	Units per package
1	Handle	48043 000	1
1.1	Repl. handle connection kit	45186 000	1
2	Extension for spindle	48044 000	1
3	Sealing washer	48047 000	1
4	Ceramic cartridge	45882 000	1
4.1	O-ring (18,2 x 1,7mm)	03924 00M	10
5	Ceramic cartridge	45883 000	1
5.1	O-ring (18,2 x 1,7mm)	03924 00M	10
6	Shank mounting kit (M28 x 1,5mm)	45025 000	1
7	Coupling nut (1/2")	12901 00M	2
7.1	Fibre seal dia. Ø 18,5 x Ø 12 x 2	01389 00M	10
8	Pop-up rod	65196 000	1
9	Flow limiter	46324 000	1
10	Compression union (3/8")	12914 000	1
11	Flexible hose	45704 000	1
12	Waste fitting	28957 000	1
12.1	Plug	45324 000	1
12.2	Housing	01153 000	1
12.3	Ball rod	45264 000	1
13	Flow control	13220 000	1
	Special Accessoires:		
14	Coupling nut (1/2" x 14.5mm)	12902 00M	2