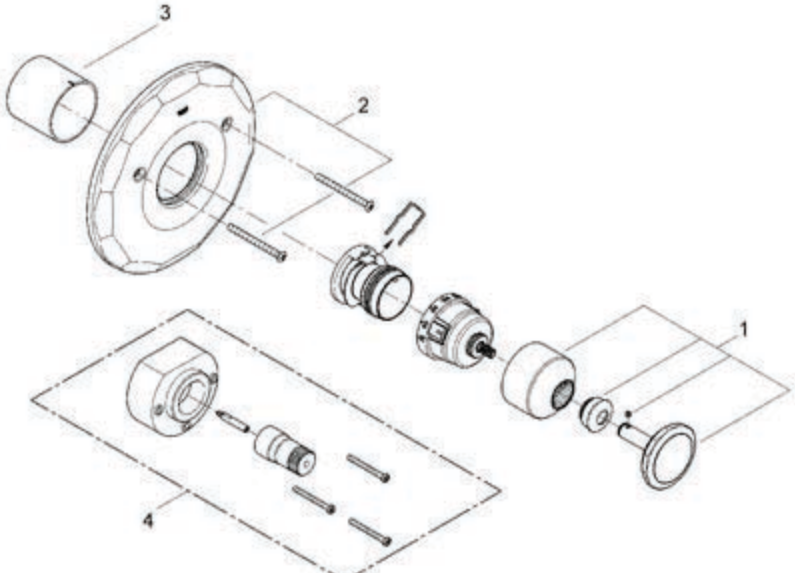

Pos.-nr.	Prod. description	Order-nr.	Units per package
1	Handle	18089 000	1
2	Escutcheon	47778 000	1
3	Sleeve	09949 000	1
	Special Accessoires:		
4	extension US	47820 000	1