RETRO-FIT 160
Shower System*
27867

Pure Freude an Wasser

GROHE America, Inc | 200 North Gary Avenue, Suite G, Roselle, IL 60172
Phone: +1 (800) 444-7643 | Fax: +1 (800) 225-2778 | us-customerservice@grohe.com

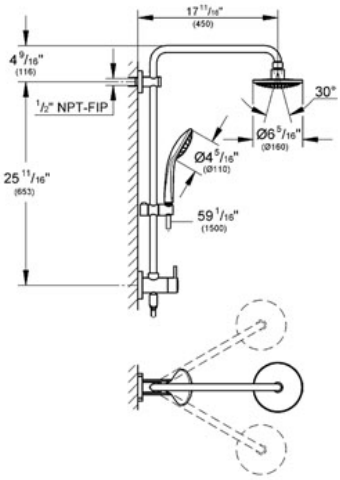

Shower System*

- **GROHE StarLight®** finish
- **GROHE DreamSpray®** perfect spray pattern
- **GROHE CoolTouch®**
- **SpeedClean** anti-lime system

Consisting of:
- Wall mount
- Horizontal swivel 17 11/16" shower arm
- Built-in diverter allows change between: head shower Euphoria Cosmopolitan (28 233) with ball-joint, rotation angle +/- 20° and hand shower Euphoria (27 493)
- Adjustable in height with gliding element
- 59" metal shower hose (28 417 000)
- Rotation cone for Twistfree-function
- **Suitable for instantaneous heaters from 18 kW/h**
- Max Flow Rate 2.5 gpm (9.5 L/min)
- Angle adapter
- Max Flow Rate 2.5 gpm at 80 psi (9.5 L/min)

Color:
❑ 27867 000 chrome