SPECIFICATIONS

REEF™ TWO HANDLE WIDESPREAD LAVATORY FAUCET

Model

D304033

Description

- Ceramic disc valves
- 4 ¾" high spout, laminar flow
- Metal touch down drain assembly
- Quick connect valve/spout system
- 3 hole mount, 6" - 12" installation
- Flow rate: 1.5 gpm @ 60 psi

Standards

- UPC/cUPC
- NSF 61-9
- Energy Policy Act of 1992

MEETS ASME A112.18.1

- ASME A112.18.1

MEETS CA AB-1953

Less than 0.25% lead content

- Meets CA AB-1953

- ADA Accessibility Guidelines for Buildings and Facilities - 4.27.4 Controls and Mechanisms

Warranty

Danze products are covered by a manufacturer's limited "lifetime" warranty for manufacturing defects.

Flow Rate

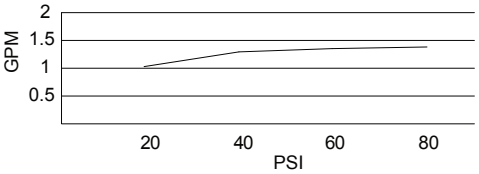

WaterSense Meets EPA Criteria

Certified by IAPMO R&T

Finishes Available

- Chrome
- Other: Refer to Price List for additional finish

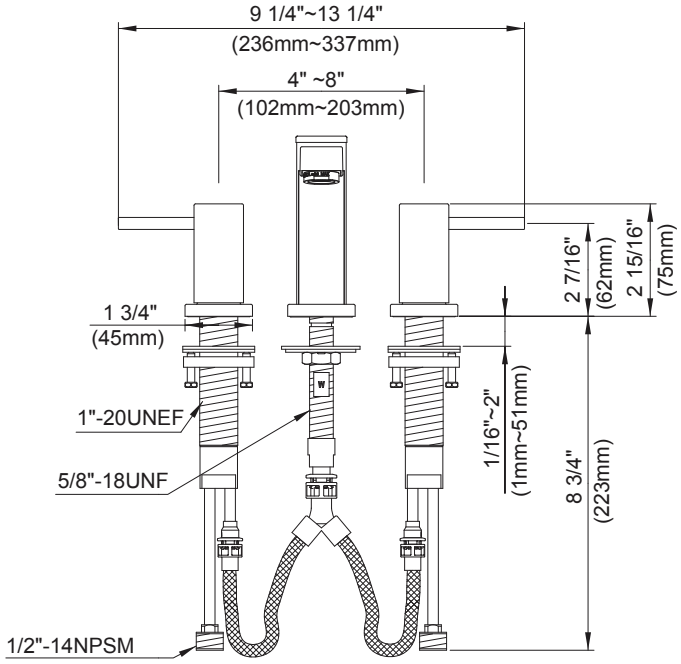

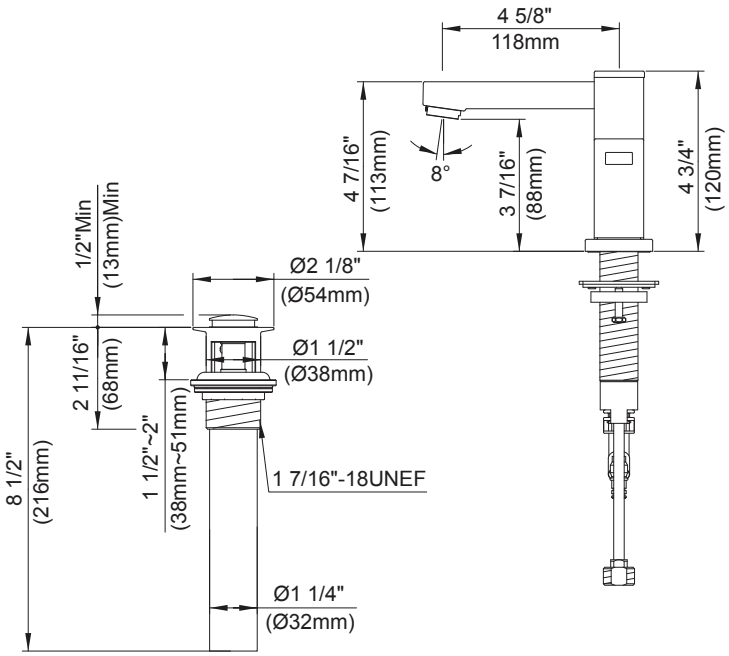

Metal touch down

Submittal Information:

Job Name: _____ *Location:* _____

Contractor: _____ *Contact #:* _____