SPECIFICATIONS

MID-TOWN™ TWO HANDLE WIDESPREAD LAVATORY FAUCET

Model

D304062

Description

- Ceramic disc cartridges
- Metal lever handles
- 3 ½" high spout, 5" spout length
- 1.5GPM (5.7LPM) pressure compensating aerator @ 60 psi
- Mini-widespread, 3 hole mount, 6" - 12" installation
- Metal touch down drain assembly

Standards

Certified to NSF/ANSI 61 Section 9

- NSF 61-9
- Energy Policy Act of 1992

NSF/ANSI 372

- ASME A112.18.1M/A112.18.1
- NSF/ANSI 372

- ADA Accessibility Guidelines for Buildings and Facilities - 4.27.4 Controls and Mechanisms

Warranty

Danze products are covered by a manufacturer's limited "lifetime" warranty for manufacturing defects.

Flow Rate

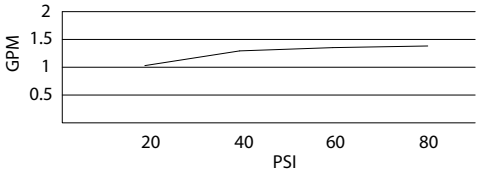

WaterSense • Meets EPA Criteria •
Certified by IAPMO R&T

Finishes Available

- Chrome
- Other: Refer to Price List for additional finish

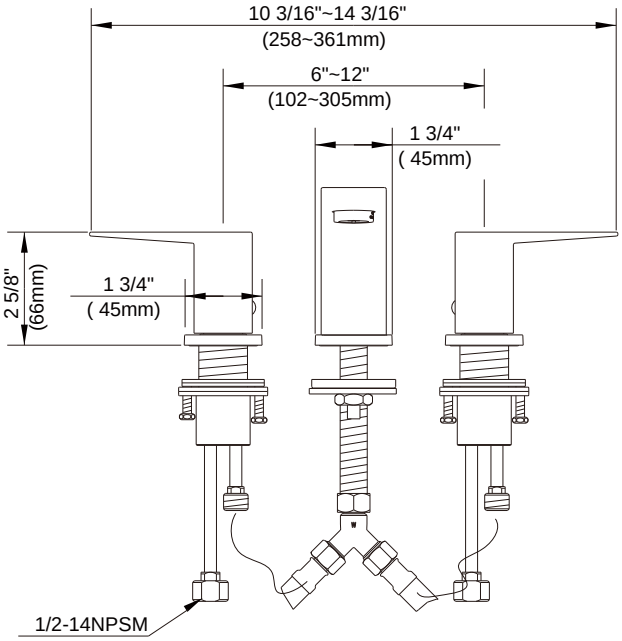

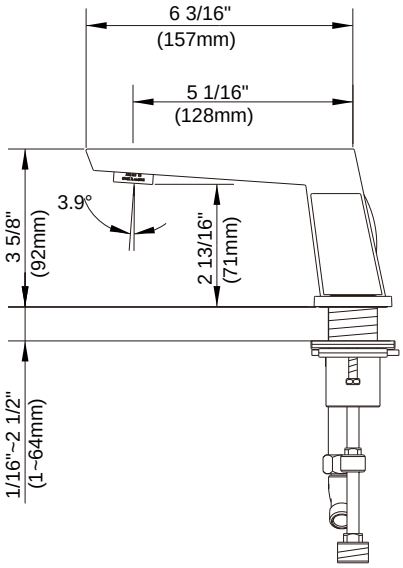

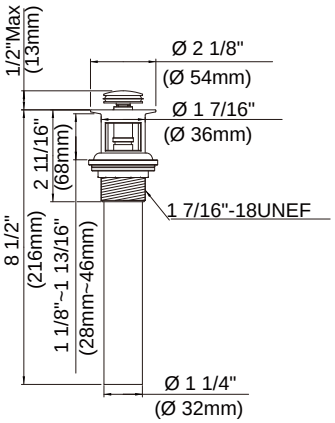

Submittal Information:

Job Name: _____ *Location:* _____

Contractor: _____ *Contact #:* _____