fluid Innovative fixtures for life

SPECIFICATIONS

Customer Service: 1-800-460-7019
www.fluidfaucets.com

SSi SUSTAINABLE SOLUTIONS INTERNATIONAL

fluid Wisdom Series
Single Lever Lavatory Faucet
Model: F28006-WS

Specifications

- Heavy brass construction for durability and reliability
- German made Fluehs ceramic cartridge ensures life long trouble free service
- Dual handle operation allows both volume and temperature control
- SSi Eco-Care aerator 1.5 gpm (5.7 lpm) at 60 psi
- Stainless steel flexible connection for 6” to 8” wide installation
- 1-1/4” or 1-1/2” faucet hole size for drilling recommended
- Dual supply inlet connection – 3/8” comp & 1/2” thread
- Available waste pop-up drain

Finish

- CP (Polished Chrome)
- PVD-BN (coming soon)

Codes and Standards

- ANSI/ASME A112.18.1
- CSA B125.1
- NSF61-9
- ADA
- IAPMO / cUPC Listed
- EPA Watersense Listed

Warranty

- Limited Lifetime Faucet Warranty against material and manufacturing defects for residential use.
- 2 Year Limited Warranty on all industrial, commercial and business applications.

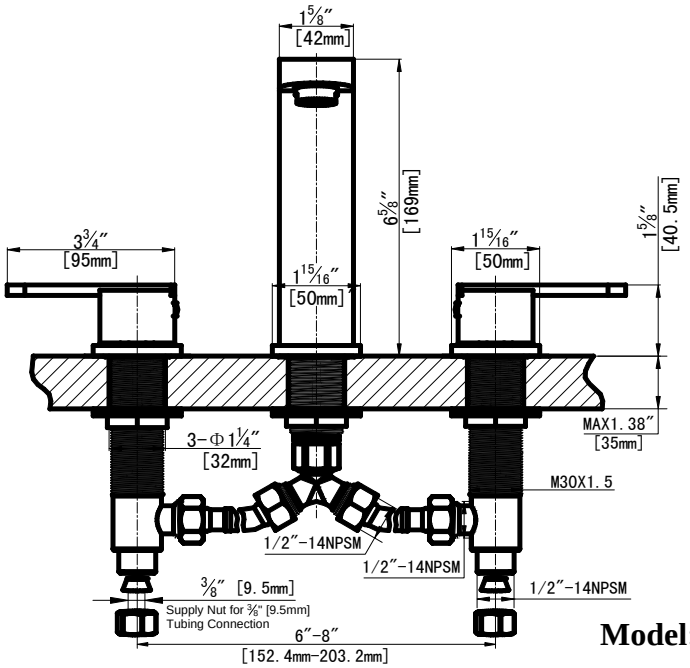

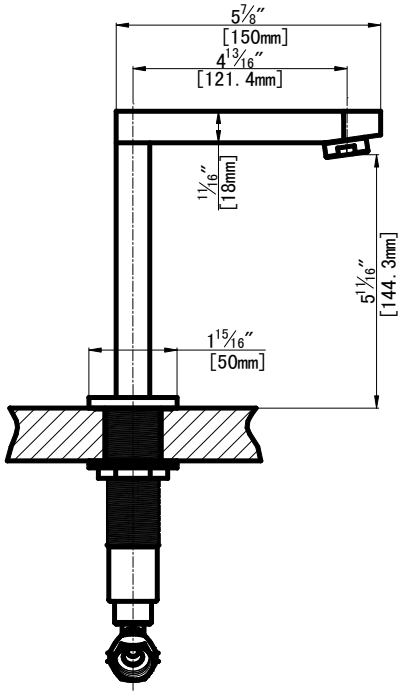

Model: F28006-WS

SSI Sustainable Solutions International
8395 Riverbend Court, Burnaby, BC
V3N 5E7, Canada