Metris
Metris 230 Single-Hole Faucet
Finishes : **Brushed Nickel** Part no. : **31087821**

Description

Features

- Solid Brass
- Aerated spray
- Flow: 1.5 GPM
- Ceramic Cartridge
- Includes pop-up assembly
- Swivel range 120°

Optional accessories

- Base Plate, 6" (#06490USA)

Item details

List Price $ 480.00

Technology

Eco Smart
Quick Clean
Comfort Zone

Compliance

WaterSense Metris EPA Criteria
UPC
ADA

Product image
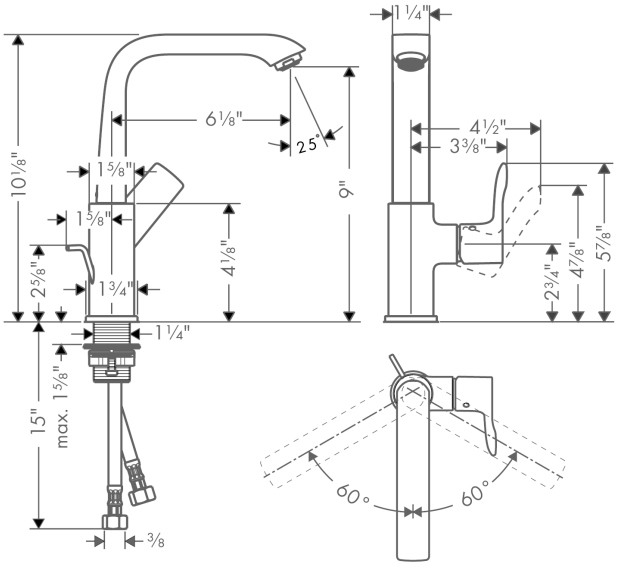
Scale drawing