Axor Starck
Rough, Axor ShowerCollection Handshower Module
Finishes : **n.a.** Part no. : **10650181**

Description

Features

- Horizontal or vertical installation
- Quick connection for easy, leak-free installation

Item details

List Price	$ 234.00

Compliance

Product image
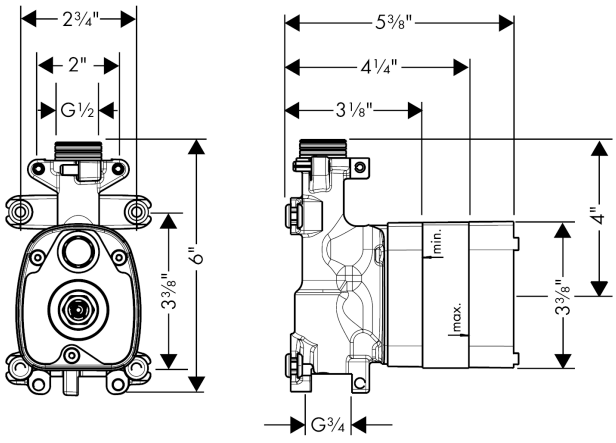
Scale drawing