Axor Massaud
Axor Massaud Vessel Sink, Large
Finishes : **White** Part no. : **42300000**

Description

Features

- Mineral cast with gelcoat

Optional accessories

- HG Basin mixer Axor Massaud chrome (#18020XXX)
- HG bath trap Flowstar complete chrome (#52120XXX)
- HG Basin mixer Axor Massaud chrome (#18020XXX)
- HG 3-hole lav mixer Axor Massaud wall (#18112XXX)
- Sink Drain (#50001USA)
- Axor Massaud Single-Hole Faucet, Tall (#18020USA)
- Axor Massaud Wall-Mounted Widespread Faucet (#18115USA)

Item details

List Price	$ 1,178.00

Compliance

Product image
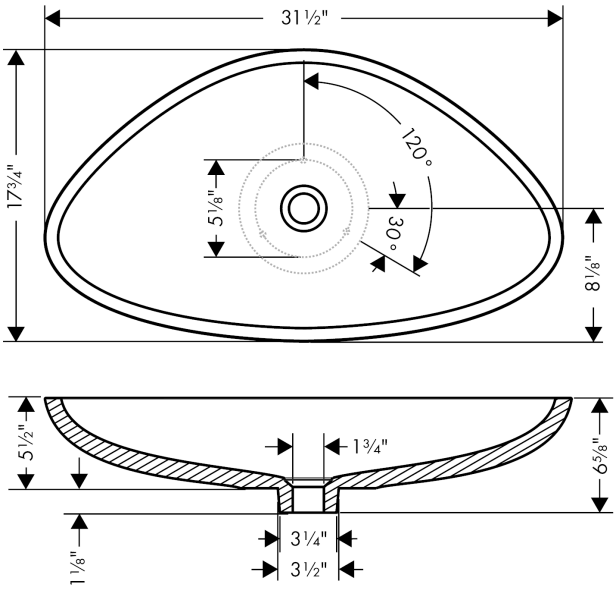
Scale drawing