Product data sheet (PDF)

**Metris**

**4-Hole Roman Tub Set Trim**

## Description

Tub Spout with diverter . Pull-out Raindance S 100 AIR 3-jet handshower with Rain AIR, Balance AIR and Whirl AIR spray modes

| Finishes | Part no. | List Price |
|---|---|---|
| chrome | 31444001 | $ 618.00 |
| brushed nickel | 31444821 | $ 828.00 |

## Product image
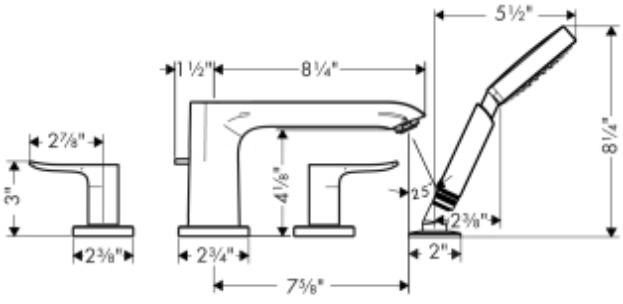
## Scale drawing