MOEN

Buy it for looks. Buy it for life.®

Illustrated Parts

■ **Order by Part Number**

M•PACT VALVE
Two-Handle Wall Mount Valve

MODEL	PACK TYPE
9700	Single

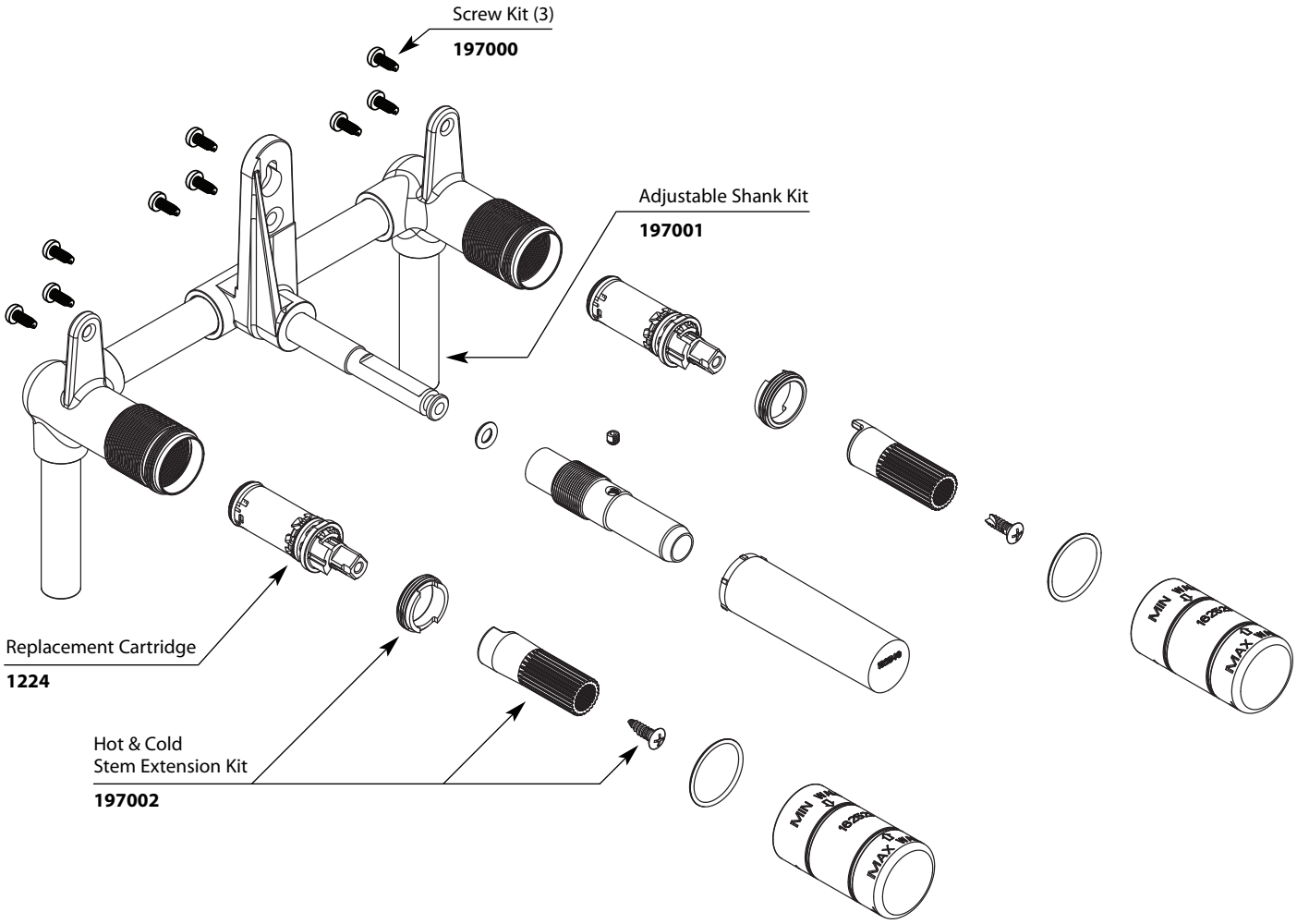

M•pact™ System

TO ORDER PARTS CALL: 1-800-BUY-MOEN
www.moen.com