MOEN

Buy it for looks. Buy it for life.®

Specifications

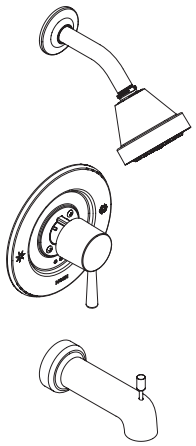

LEVEL™ POSI-TEMP®
Single-Handle Tub/Shower (Trim Only)

Models: T2703 series

FAUCET DESCRIPTION
- Metal construction with various finishes identified by suffix
- Includes showerhead, arm, flange and diverter spout

OPERATION
- Handle operates counterclockwise through a 270˚ arc with off at 6 o'clock and maximum hot at the 9 o'clock position. Shut off in clockwise direction
- Adjustable temperature limit stop to control maximum hot water temperature
- Pressure balancing mechanism maintains selected discharge temperature to ± 3°

FLOW
- Showerhead limited to 2.5 gpm max. (9.5 L/min)

CARTRIDGE
- 1222 cartridge design
- Nonmetallic/nonferrous and stainless steel materials
- Accommodates back to back installations

STANDARDS
- Third party certified to meet ASME A112.18.1/CSA B-125.1, ICC A117.1 and all applicable requirements referenced therein
- **ADA** for lever handle

WARRANTY
- Lifetime limited warranty against leaks, drips and finish defects to the original consumer purchaser
- 5 year warranty if used in commercial installations

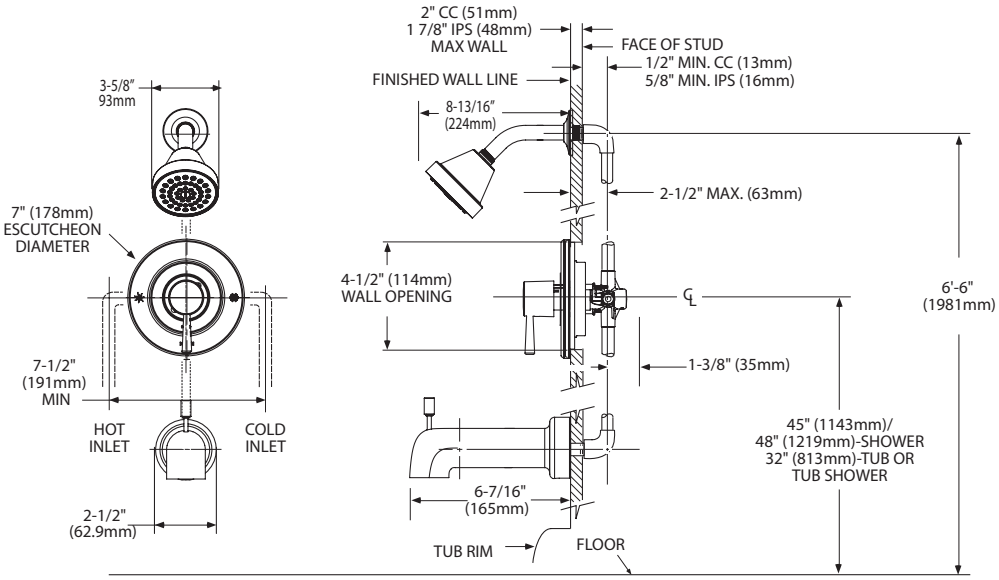

THICK WALL APPLICATION

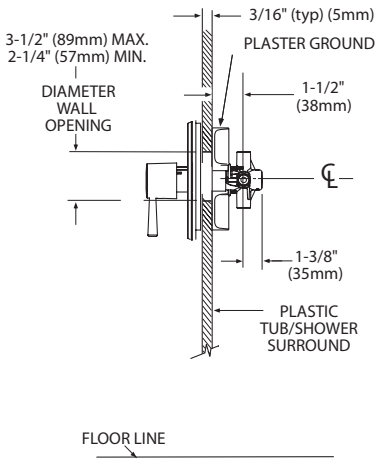

THIN WALL APPLICATION

CRITICAL DIMENSIONS

(DO NOT SCALE)

FOR MORE INFORMATION CALL: 1-800-465-6130
www.moen.com