MOEN

Buy it for looks. Buy it for life.®

Specifications

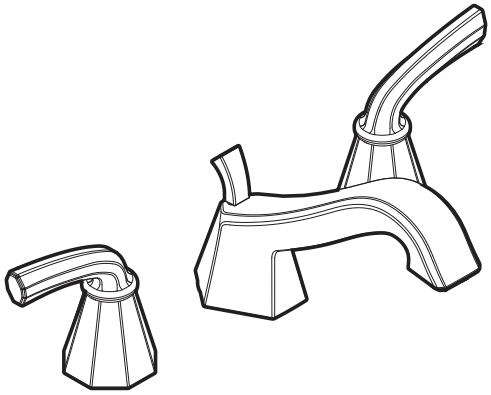

FELICITY™
Two-Handle Widespread Lavatory Faucet Trim

Models: TS447 series

Valve: 9000

WaterSense Meets EPA Criteria
Certified by IAPMO R&T

DESCRIPTION
- Metal construction with various finishes identified by suffix
- 1/2" IPS connections will accept standard ball nose connection for 3/8" tubing
- Hydrolock™ quick connect installation
- Includes metal pop-up waste assembly
- Designed to be installed through 3, 1-1/8" dia. holes, 8 - 16" on center

OPERATION
- Lever style handles
- Maximum handle rotation angle is 90˚ to full on for either handle
- Rotate hot side handle counterclockwise to open and clockwise to close
- Rotate cold side handle clockwise to open and counterclockwise to close

FLOW
- Flow is limited to 1.5 gpm max (5.7 L/min) at 60 psi
- Features a laminar flow pattern for dramatic water presentation

CARTRIDGE
- 1224 cartridge design with nonmetallic/nonferrous and stainless steel materials

STANDARDS
- Third party certified to WaterSense,® CSA B125.1, ASME A112.18.1, ICC A117.1 and all applicable requirements referenced therein
- Certified to ANSI/NSF 61/9
- Contains no more than 0.25% weighted average lead content
- Complies with California Proposition 65 and with the Federal Safe Drinking Water Act
- **ADA** for lever handle

WARRANTY
- Lifetime limited warranty against leaks, drips and finish defects to the original consumer purchaser
- 5 year warranty if used in commercial installations

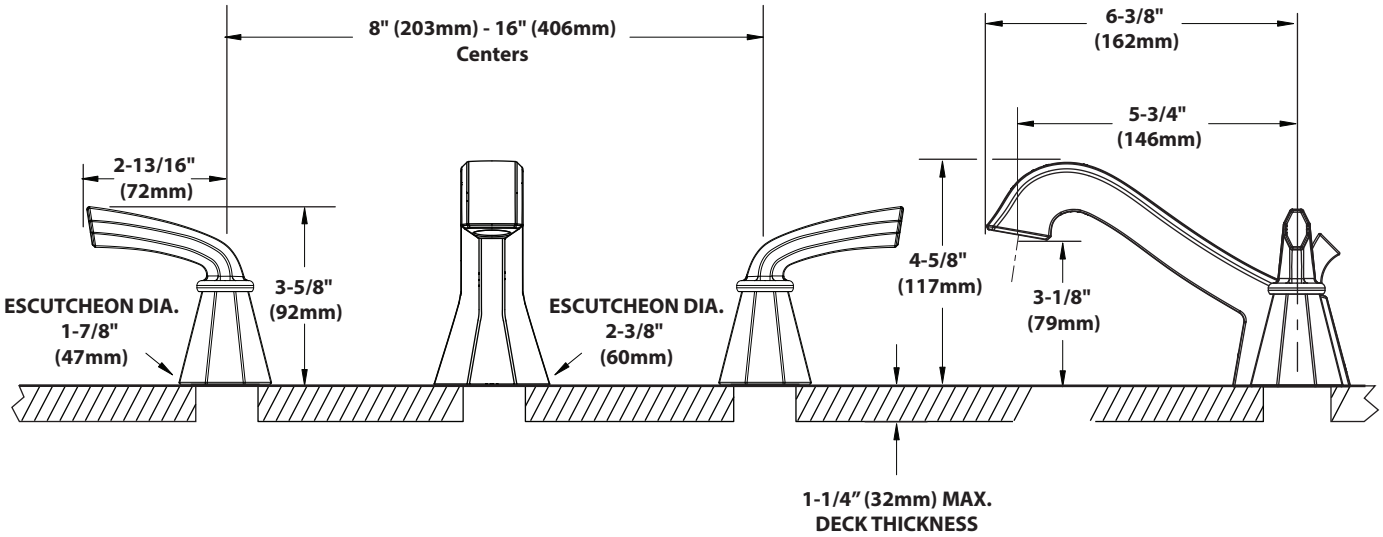

CRITICAL DIMENSIONS

(DO NOT SCALE)

FOR MORE INFORMATION CALL: 1-800-BUY-MOEN
www.moen.com

Rev. 3/11

TS9447DC15 SPC1278 9000014535
Released 1/12