MOEN COMMERCIAL

Specifications

ADA

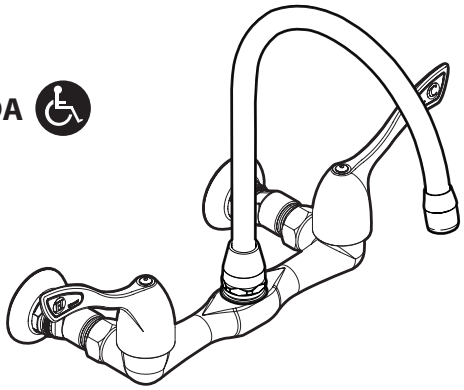

Two-Handle Wall Mount Faucet

Model: 8126

FAUCET DESCRIPTION
- Chrome plated brass construction
- Less spout
- 1/2" IPS connections

OPERATION
- 4" wrist blade handles with hot and cold color indicators and vandal resistant screws

CARTRIDGE
- Ceramic 28mm cartridge design
- Nonmetallic and nonferrous material
- 1/4 turn operation

STANDARDS
- Designed and manufactured to comply with the requirements of: CSA B-125 and ASME A112.18.1M and all specifications referenced therein and complies with the requirements of ANSI A117.1
- Certified to ANSI/NSF 61/9
- Complies with California Proposition 65 and the Federal Safe Drinking Water Act

WARRANTY
- Warranted for 5 years against material or manufacturing defects

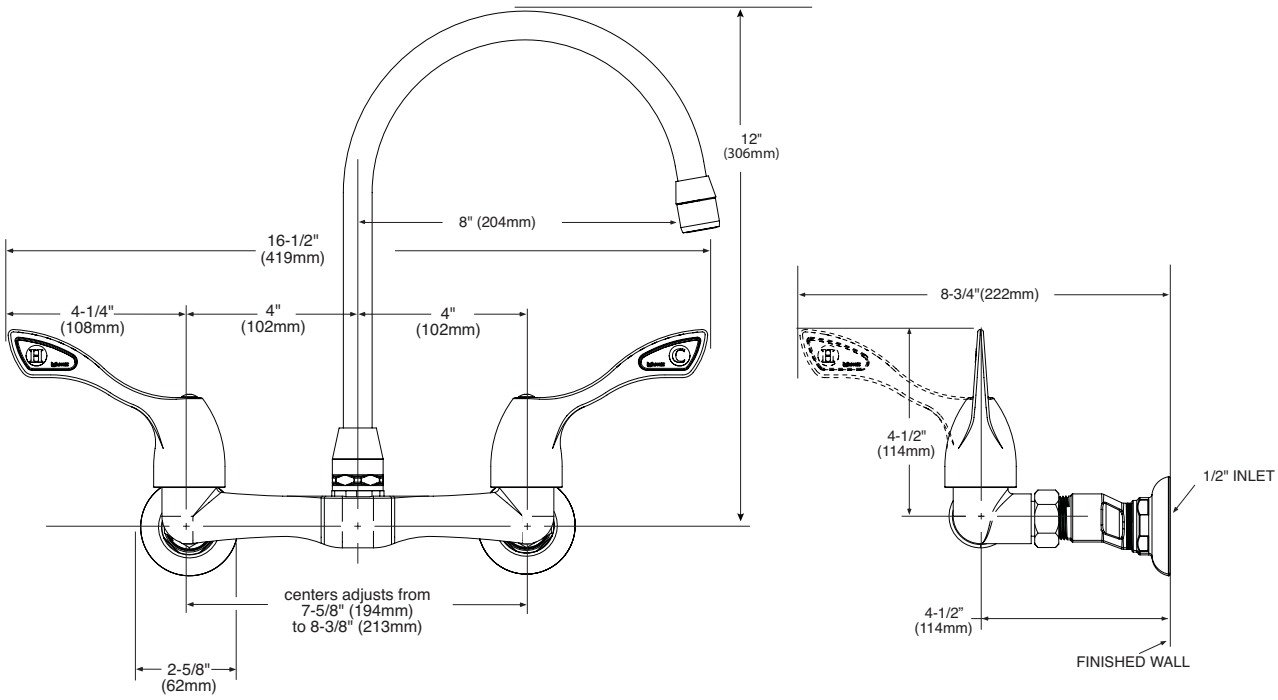

CRITICAL DIMENSIONS

(DO NOT SCALE)