KOHLER® FAUCETS

CORALAIS®

CENTERSET BATHROOM SINK FAUCET
K-15681
ALSO K-P15681

Features

- *Metal construction*
- *One-piece, self-contained ceramic disc valve allows both volume and temperature control*
- *Temperature memory allows faucet to be turned on and off at any temperature setting*
- *High-temperature limit setting for added safety*
- *4-1/4″ (108 mm) spout reach*
- *Stationary spout*
- *Sculptured acrylic handle*
- *For 4″ (102 mm) centers*
- *Available with flexible connections or ground joints*
- *Available with a metal or plastic pop-up drain*
- *Available in quantities of six [K-P15681]*
- *1.5 gallons (5.7 liters) per minute maximum flow rate*

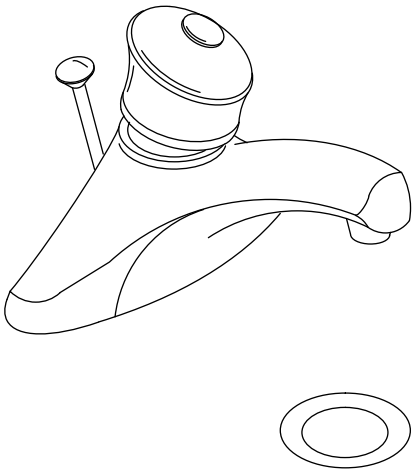

Codes/Standards Applicable

Specified model meets or exceeds the following at date of manufacture:

- *ASME A112.18.1/CSA B125.1*
- *NSF 61*
- *All applicable US Federal and State material regulations*
- *EPA WaterSense®*

Colors/Finishes

- CP: Polished Chrome
- Other: Refer to Price Book for additional colors/finishes

Specified Model

Model	Description	Colors/Finishes	
K-15681-F	Centerset bathroom sink faucet – flexible connections, metal drain	❑ CP	❑ Other ____
K-15681-P	Centerset bathroom sink faucet – ground joints, metal drain	❑ CP	❑ Other ____
K-P15681-F	Centerset bathroom sink faucet – quantity 6 – flexible connections, metal drain	❑ CP	❑ Other ____
K-P15681-FD	Centerset bathroom sink faucet – quantity 6 – flexible connections, plastic drain	❑ CP	❑ Other ____
K-P15681-P	Centerset bathroom sink faucet – quantity 6 – ground joints, metal drain	❑ CP	❑ Other ____
K-P15681-PD	Centerset bathroom sink faucet – quantity 6 – ground joints, plastic drain	❑ CP	❑ Other ____

Optional Accessories
Additional flow options are available (refer to the Kohler Price Book)

Product Specification

The single-control centerset bathroom sink faucet shall be of metal construction. Product shall have a maximum flow rate of 1.5 gallons (5.7 L) per minute. Product shall feature a one-piece, self-contained ceramic disc valve which allows both volume and temperature control. Product shall feature temperature memory, which allows the faucet to be turned on and off at any temperature setting. Product shall feature a sculptured acrylic handle, 4-1/4″ (108 mm) spout reach, stationary spout, and high-temperature limit setting for added safety. Product shall be available with either flexible connections or ground joints. Product shall be available with a metal or plastic pop-up drain and be available in quantities of six [K-P15681]. Product shall be for 4″ (102 mm) centers. Faucet shall be Kohler Model K-15681-____-____ or K-P15681-____-____.

USA/Canada: 1-800-4KOHLER
(1-800-456-4537)
www.kohler.com

CORALAIS®

Installation Notes

Install this product according to the installation guide.

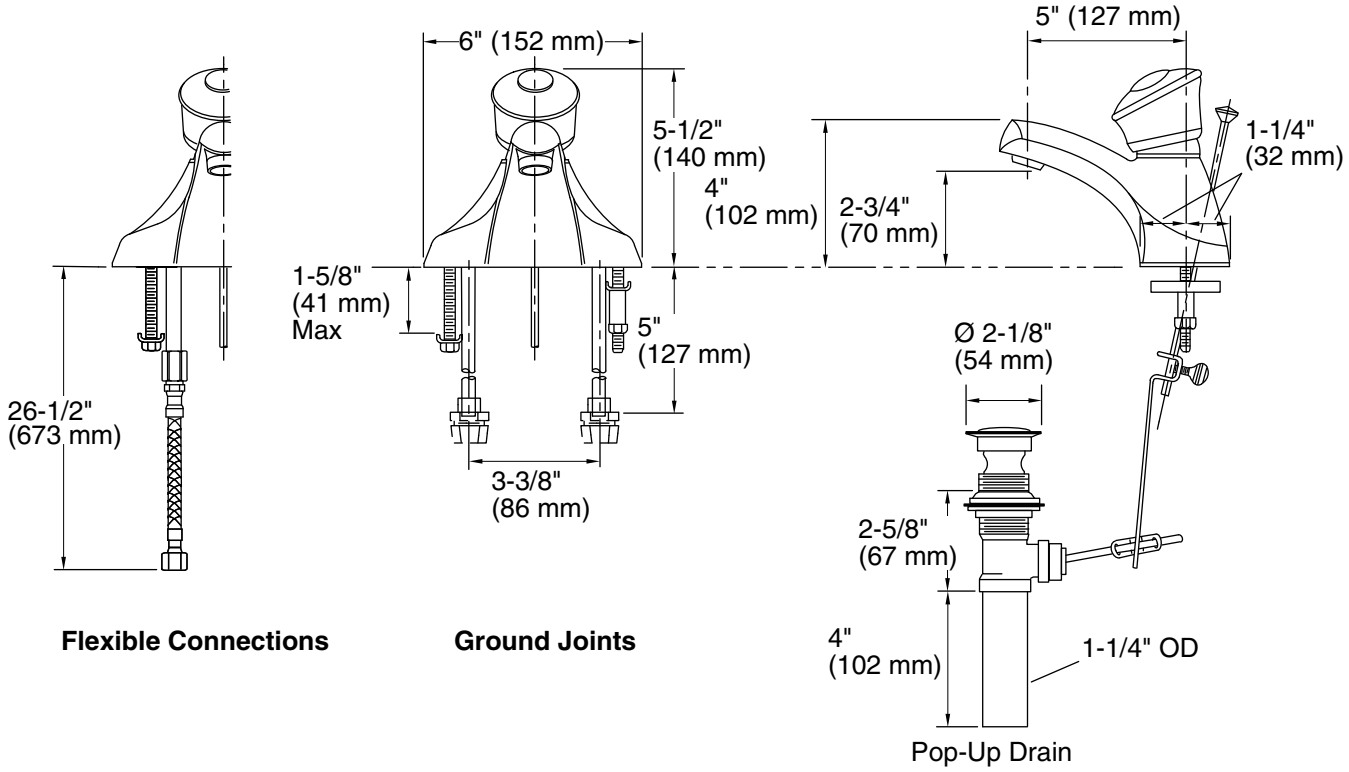

Flexible Connections **Ground Joints**

Product Diagram

THE BOLD LOOK OF KOHLER®