CAXTON®

Technical Information

Fixture*:	
Basin area	17″ (432 mm) x 14″ (356 mm)
Water depth	6-3/8″ (162 mm)
Drain hole	Ø 1-3/4″ (44 mm)
*Approximate measurements for comparison only.	

Cutout template	1151011-7

Included components:	
Basin clamp assembly	1193643

Installation Notes

Install this product according to the installation guide.

NOTICE: Countertop manufacturer or cutter must use the current product template available at www.kohler.com, or by calling 1-800-4KOHLER. Kohler Co. is not responsible for cutout errors when the incorrect cutout template is used.

Will comply with **ADA** when installed per section 606 Lavatories and Sinks of the 2010 ADA Standards for Accessible Design.

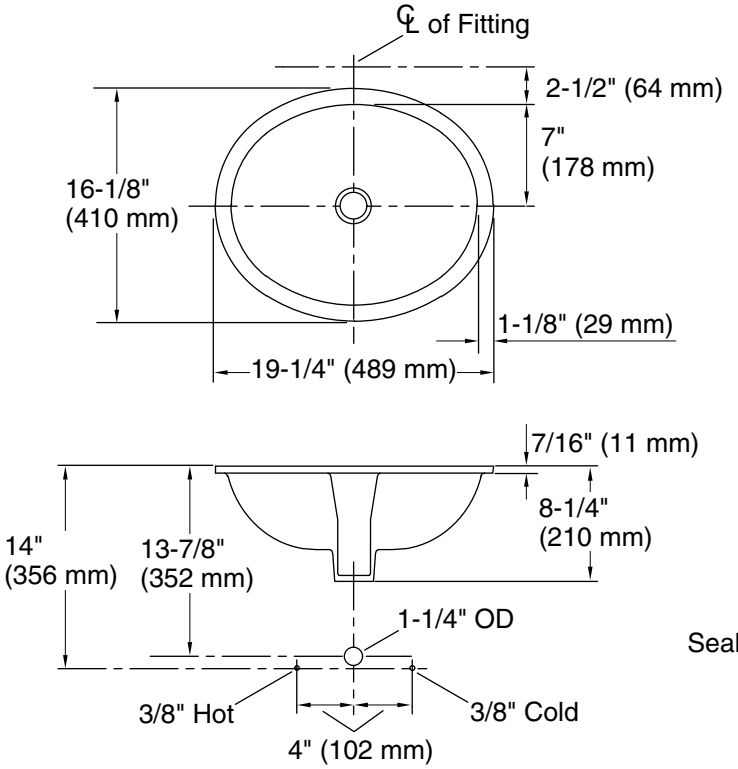

Standard Installation

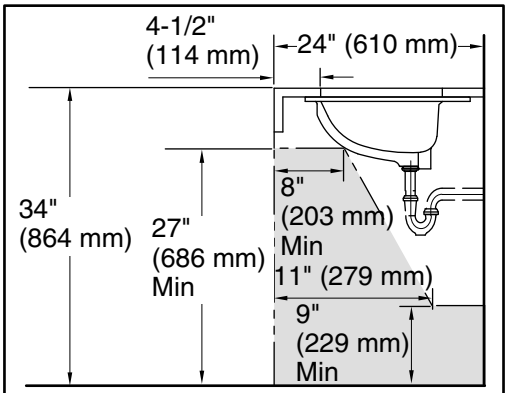

Recommended ADA Installation

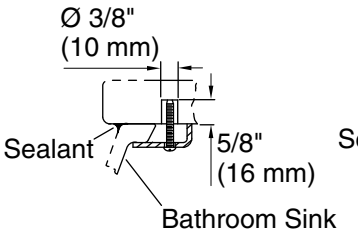

Marble Installation

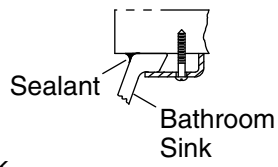

Wood Installation

Product Diagram

THE BOLD LOOK OF KOHLER®