SERVICE PART

DUAL ART™

TALL LAVATORY FAUCET

DARTL10CP
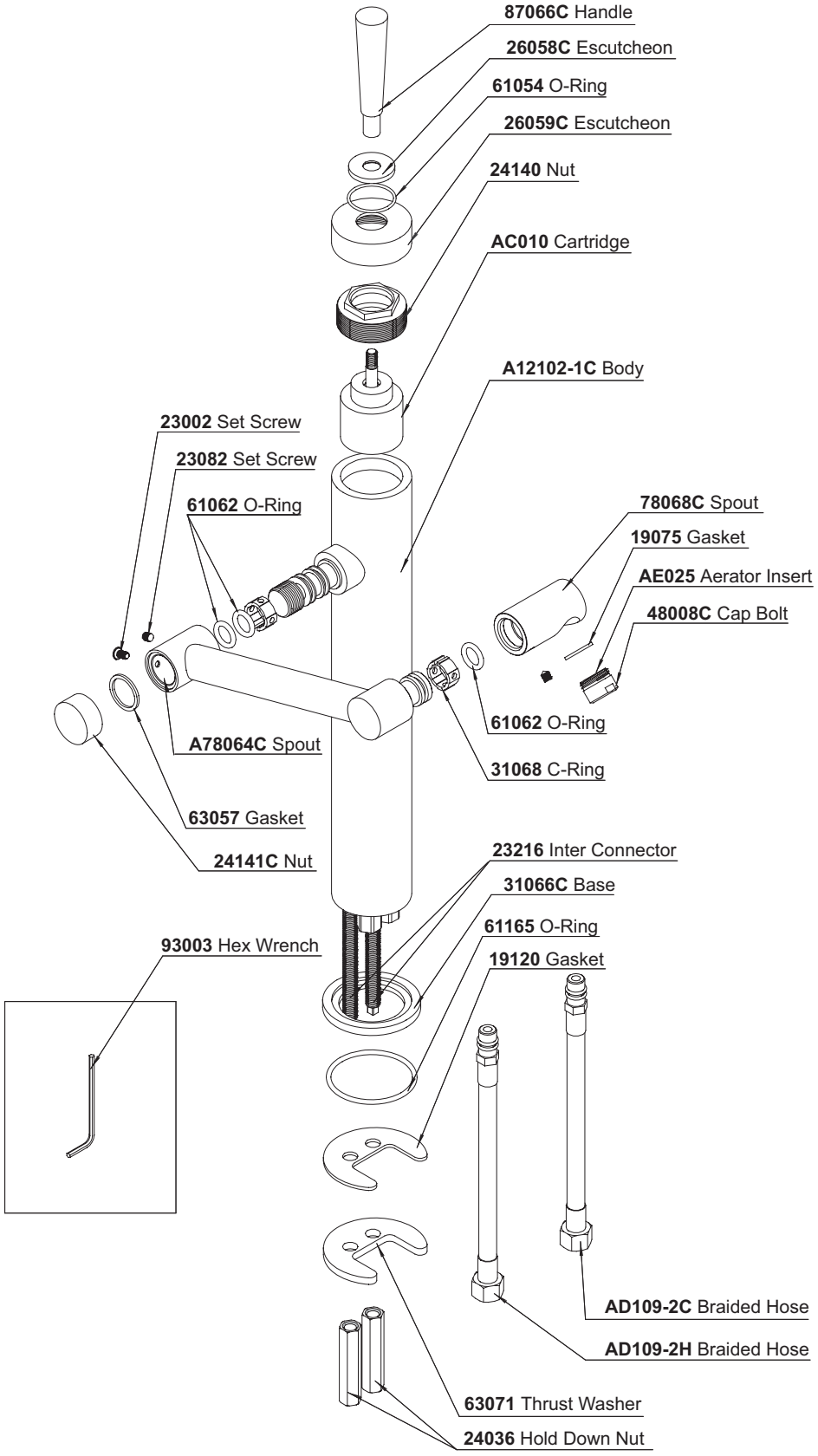
Patent Pending