SINK SPECIFICATIONS

VIGO

http://www.vigoindustries.com
1-866-591-7792

ELONGATED SINGLE BOWL Undermount
Model VGR3219C

FEATURED MODEL VGR3219C
10" BOWL DEPTH

FEATURES

- 16 gauge, stainless steel
- 18/10 Nickel Content
- 15 degree radius corners
- Elegant and functional drain grooves
- Long-lasting, easy-to-clean, satin finish
- Sound-deadening insulation
- Rear drain placement

PACKING LIST

- SINK
- MOUNTING HARDWARE
- TEMPLATE

NOMINAL DIMENSIONS

MODEL #	BOWL SIZE	SINK DEPTH	EXTERIOR DIM.	GAUGE
VGR3219C	29 7/8"x17"	10"	32"x19"	16

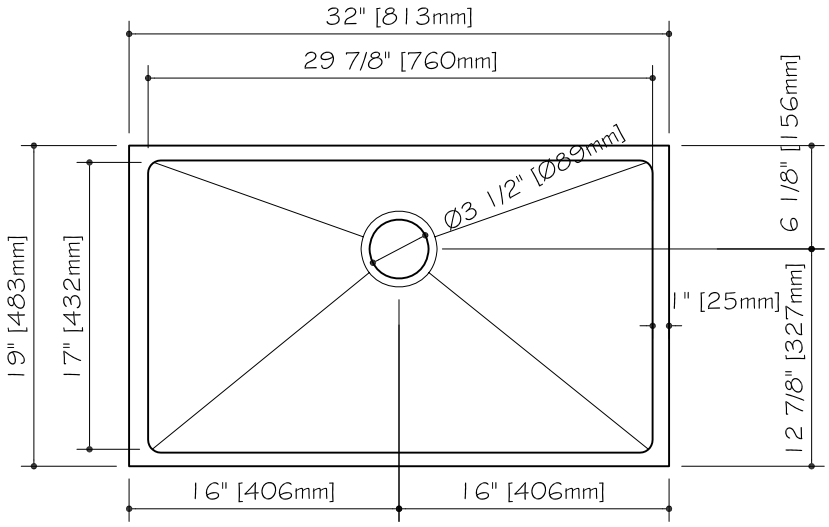

TOP VIEW

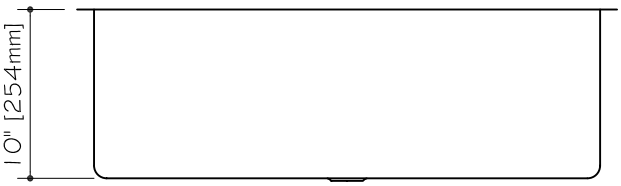

FRONT VIEW

http://www.vigoindustries.com
1-866-591-7792

LIMITED WARRANTY

VIGO offers the following express limited warranty on each of its products. This warranty extends only to the original owner/end-user for personal household use. For commercial uses, additional limitations apply.

VIGO warrants **acrylic units** to be free from defects in workmanship and materials under normal use and service for a period of twenty (20) years from the initial date of purchase by the owner/end-user, contractor or builder from an authorized dealer.

VIGO warrants **shower panels** to be free from defects in workmanship and materials under normal use and service for a period of one (1) year from the initial date of purchase by the owner/end-user, contractor or builder from an authorized dealer.

VIGO warrants **shower doors** to be free from defects in workmanship and materials under normal use and service for a period of ten (10) years from the initial date of purchase by the owner/end-user, contractor or builder from an authorized dealer.

VIGO warrants **faucets** to be free from defects in workmanship and materials under normal use and service for a period of one (1) year from the initial date of purchase by the owner/end-user, contractor or builder from an authorized dealer.

Any product reported to the authorized dealer or to **VIGO** as being defective within the warranty period will be repaired or replaced (with a product of equal value) at the option of VIGO. This warranty extends to the original owner/end-user and is not transferable to a subsequent owner.

Neither the distributor, authorized **VIGO** dealer nor or any other person has been authorized to make any affirmation, representation or warranty other than those contained in this warranty; any affirmation, representation or warranty other than those contained in this warranty shall not be enforceable against **VIGO** or any other person.

VIGO reserves the right to modify this warranty at any time, it being understood that such modification will not alter the warranty conditions applicable at the time of the sale of the products in question.

EFFECTIVE JANUARY 1, 2004

Limitations

This warranty shall not apply following incorrect operating procedures, breakage or damages caused by fault, carelessness, abuse, misuse, misapplication, improper maintenance, alteration or modification of the unit, as well as chemical or natural corrosion, accident, fire, flood, act of God or any other casualty.

The owner/end-user of the product covered by the present warranty is entirely responsible for its proper installation and electrical wiring. **VIGO** neither installs nor supervises the installation, nor hires a contractor for this purpose, and consequently cannot be held responsible for any default, breakage or damages caused thereby or resulting thereof, either directly or indirectly. The owner/end-user must provide access to the components of the product as described in the installation guide, so that **VIGO** can execute the warranty specified herein. If such access is not available, all expenses to provide said access will be the responsibility of the owner/end-user.

This warranty does not apply to products or equipment not installed or operated in accordance with instructions supplied by **VIGO** and all applicable rules, regulations and legislation pertaining to such installations.

VIGO strongly recommends that its products - for example, but without limitation, shower doors and other items - be installed by professionals with experience in bathroom products. Installation of shower doors by an inexperienced person may result in glass breakage and, consequently, cause personal injury or death.

VIGO is not liable for any costs, damages or claims resulting from the purchase of products that do not fit through openings or existing structures. **VIGO** is not liable for any costs, damages or claims resulting from defects that could have been discovered, repaired or avoided by inspection and testing prior to installation.

VIGO is not liable for personal injuries or death to any person or for any direct, special, incidental or consequential damage, loss of time, loss of profits, inconvenience, incidental expenses, labor or material charges, or any other costs resulting from the use of the product or equipment or pertaining to the application of the present warranty, or resulting from the removal or replacement of any product or element or part covered by this warranty.

EXCEPT AS OTHERWISE PROVIDED ABOVE, VIGO MAKES NO WARRANTIES, EXPRESS OR IMPLIED, INCLUDING WARRANTIES OF MERCHANTABILITY AND FITNESS FOR A PARTICULAR PURPOSE OR COMPLIANCE WITH ANY CODE.

In any case, **VIGO** cannot be liable for any amount over and above the purchase price paid for the product by the owner/end-user, contractor or builder.

Commercial Limitations

In addition to the above conditions and limitations, the warranty period for products installed for commercial applications or used in commercial ventures is of one (1) year from the initial date of purchase by the owner/end-user, contractor or builder from an authorized dealer. **VIGO** is not responsible for loss of use or profit under any circumstances. If the product is used as a display, the warranty period begins when the product is placed on display.

This warranty gives the owner/end-user specific legal rights. The owner/end-user may also have other rights which vary from one state and/or province to another.

Warranty service

In order to obtain service provided under this warranty during regular business hours, contact the dealer or distributor who sold the unit, or **VIGO** directly.

VIGO will provide the warranty service described above when the following conditions have been met: the failure is of the nature or type covered by the warranty; the user has informed an authorized **VIGO** Agent or Warranty Service Department representative of the nature of the problem during the warranty period; conclusive evidence (e.g., proof of purchase or installation) is provided to the foregoing by the user proving that the failure occurred or was discovered within the warranty period; an authorized independent service person or company representative has been permitted to inspect the product during regular business hours within a reasonable time after the problem was reported by the user.

VIGO's warranty obligation shall be discharged upon tender of replacement or repair. The customer's refusal to accept the tender terminates VIGO's warranty obligation.

Certain models are pending approval.

Certification may be ended by **VIGO** or certification agencies without notice.