Wiring supplies as required by electrical code

FLUSHMOUNT (FM)

TOOLS AND MATERIALS REQUIRED:

Wrench

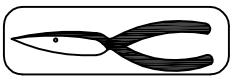
Pliers

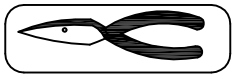
Wire Cutters

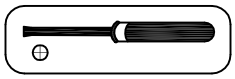
Philips Screwdriver

SAFETY PRECAUTIONS:

1.Turn off power at main electrical service box before starting installation.
2.Electrical connections must comply with local code ordinances or national electrical codes.

INSTALLATION:

NOTE: Fixture may not look exactly the same as pictures

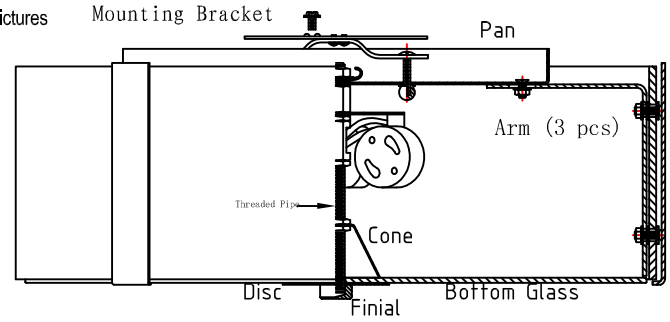

Step 1: Carefully remove the fixture from carton. Check to ensure all parts are included as per diagram. Do not misplace any parts during assembly.

Step 2: Connect mounting bracket to electrical box using screws provided or the mounting screws in the electrical box.

Step 3: Place three pieces of glass on flat surface and join together using brackets and nuts. Ensure to place a rubber washer on both sides of the glass. Hand tighten only. If you over tighten nuts you may crack the glass.

Step 4: Attach glass assembly to fixture pan using the screws, washers and nuts provided in the pan mounting holes.

Step 5: Install proper type and wattage of bulb (sold separately) as per bulb label on fixture or socket.

Step 6: Connect ground wire to back of electrical box. Connect white wire from fixture to white wire from box using wire nut provided. Repeat for black wire. Ensure no wires are pinched between pan and ceiling , then secure pan to ceiling using finish cap nuts.

Step 7: Install bottom glass using threaded pipe and cone assembly, disc and finial.

Your installation is now complete, restore power and enjoy your new fixture.

Care and Cleaning

Always turn off power at the source(main electrical panel) before any type of cleaning or maintenance.
The glass can be cleaned using a soft cloth and mild dish soap. Never use abrasive pads or strong cleaning agents they will damage the finish on the glass.
The fixture can be cleaned using a soft dry cloth. Never use abrasive pads or water to clean electrical fixtures.