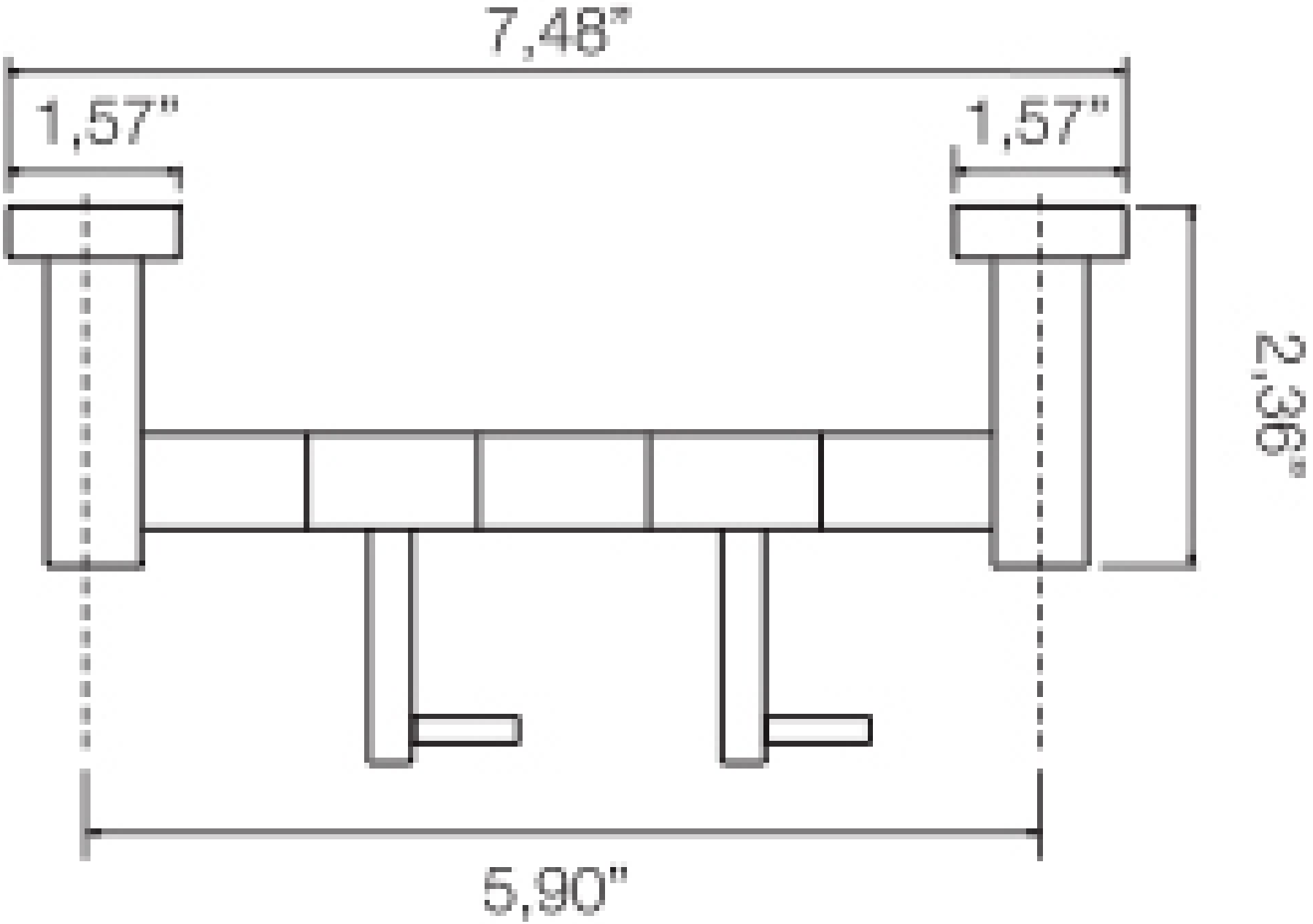
7,48"
1,57"
1,57"
2,36"
5,90"