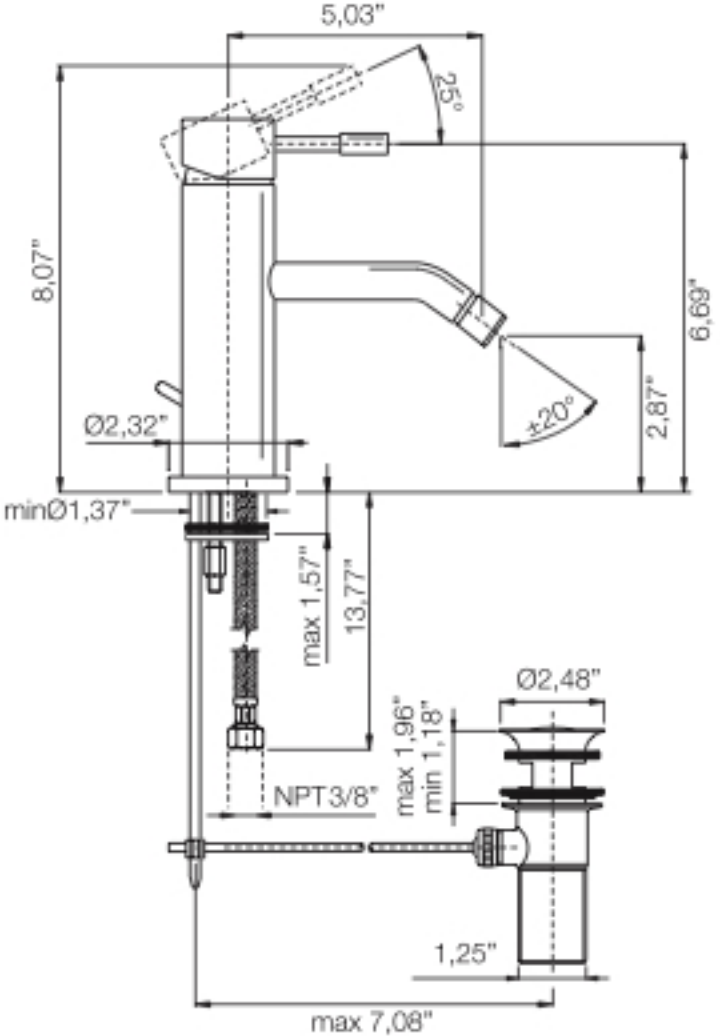
5,03"
25°
8,07"
6,69"
2,87"
±20°
Ø2,32"
minØ1,37"
max 1,57"
13,77"
Ø2,48"
max 1,96"
min 1,18"
NPT3/8"
1,25"
max 7,08"