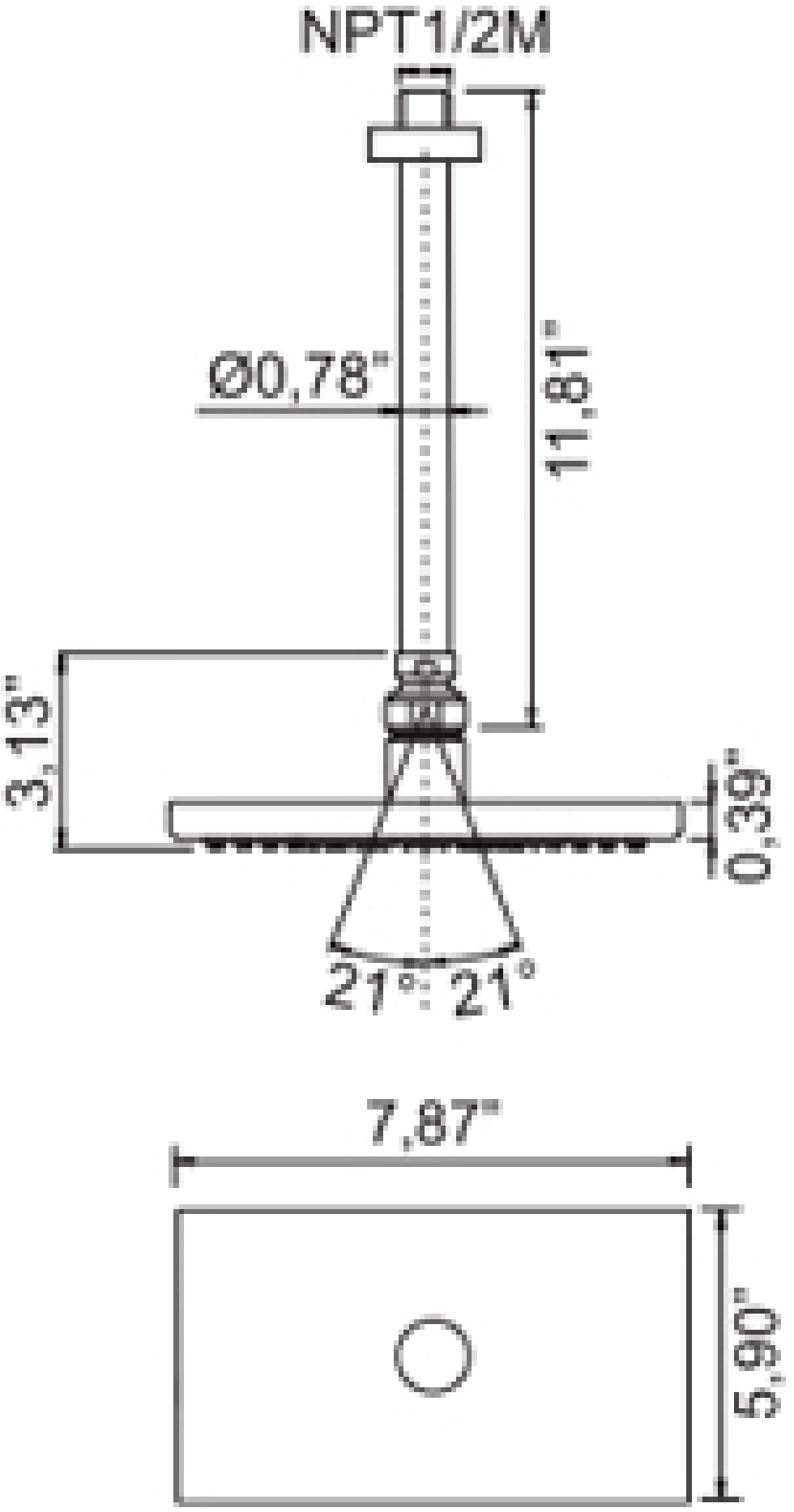
NPT1/2M
Ø0,78"
11,81"
3,13"
0,39"
21°
21°
7,87"
5,90"