Elements of Design

MODEL#: **EDTL1188**

18" Trip Lever Waste & Overflow W/Grid, Sn

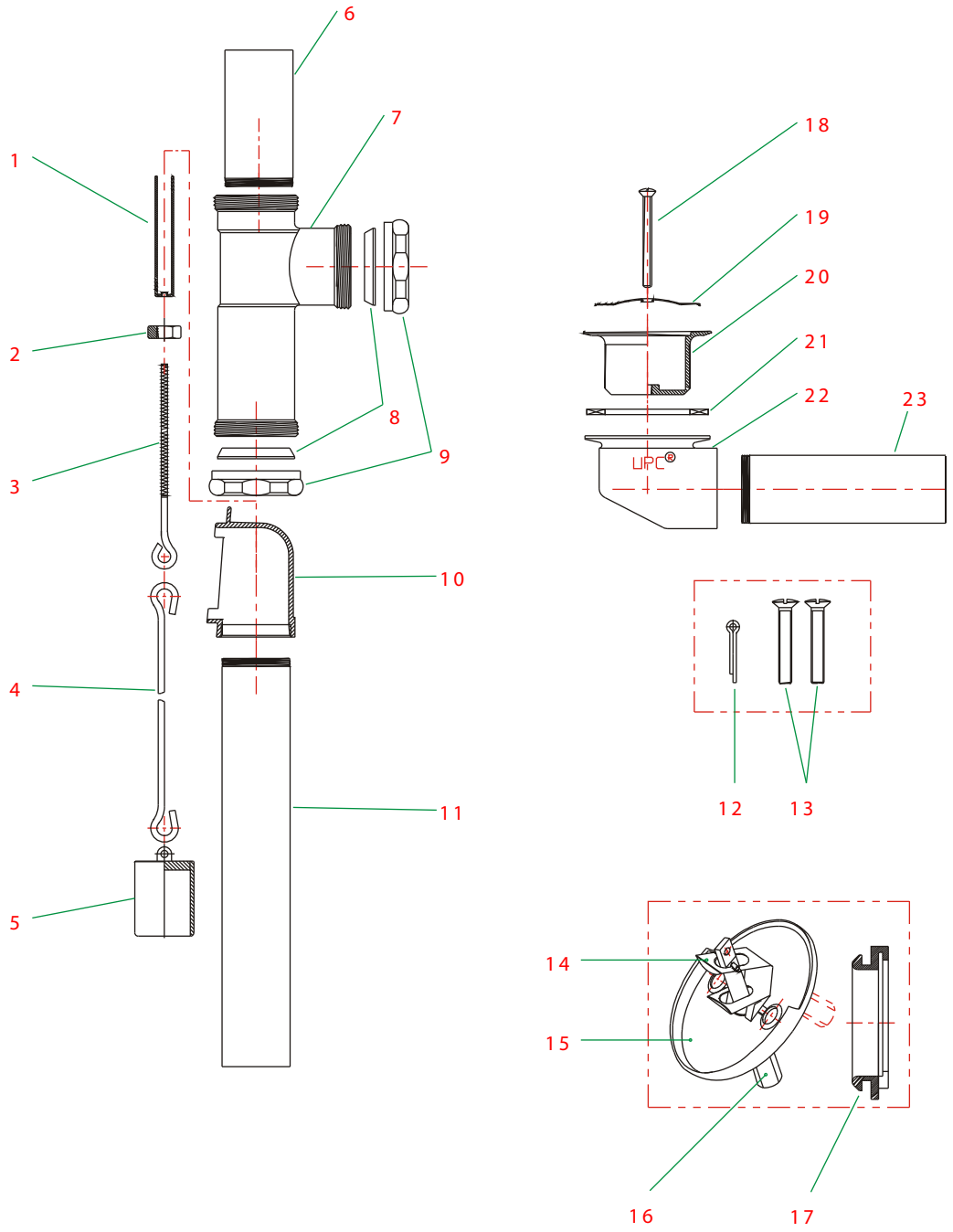

Note: Drawing shows overall style of the product, faucet handle style may be different to the product model number this chart is refering to.

EODFAUCET.COM | T 909.465.6687 F 909.548.0668