MODEL#:**ES4988CML**
PRODUCT SPECIFICATION SHEET

Elements Of Design

DESCRIPTION:

Manhattan 8" Widespread Lav Faucet, Sn

CARTRIDGES (If applicable):

CARTRIDGE TYPE	MODEL #
Hot Cartridge	KSRPL5000HC
Cold Cartridge	KSRPL5000CC
Shared or Single H&C Cartridge	
Diverter (If applicable)	

Note: Please always check with Elements of Design Customer Service for Cartridge Model Number Verification before you order.
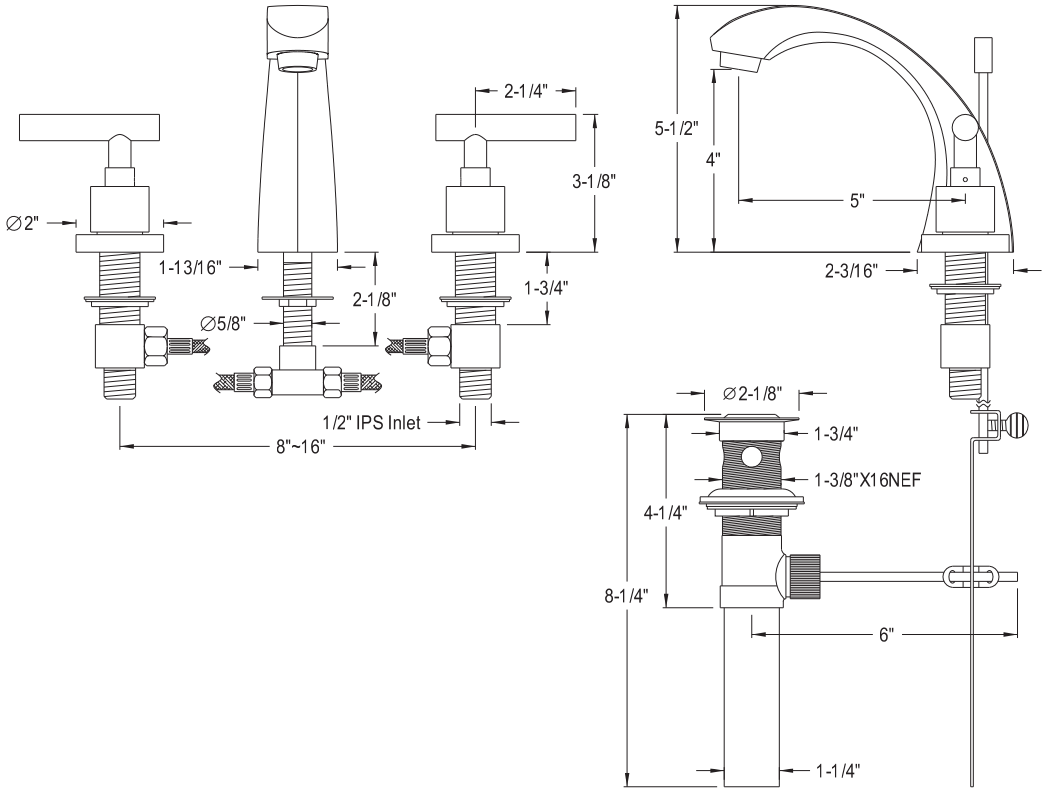
Note: Photo above and Drawing below shows overall style of the product, handle styles may be different to the product model number this specification sheet is refering to