Back to Back installation instructions

In situations where the hot and cold water inlet supplies are not in the standard positions, a reversible type cartridge can be used. A reversible cartridge will allow you to modify the direction of the water supply to the correct orientation without changing the pipe locations. It is easy to change the installation by yourself by using the following instruction.

1. Remove the handle (1) from the body with hand. (Fig.1)
2. Remove the "E" clip (2) from the cartridge body with pliers.
3. Remove the stem ring (3) from the cartridge body with pliers.
4. Reverse the cartridge stem by turning 180. (It is not necessary to remove the cartridge.)
5. Replace the stem ring into the cartridge make sure the flat side is on top. (see Fig 2)
6. Replace the "E" clip onto the cartridge body.
7. Reinstall the cap to the body and hand tighten.

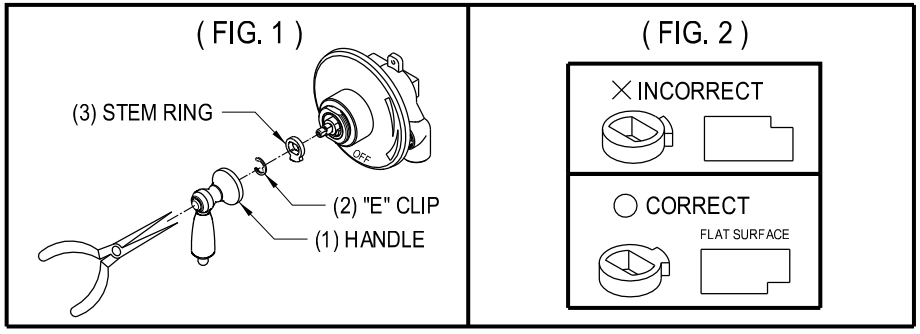

Procedure for the Pressure Balance Spool Assembly Repair and Maintenance

1. Close the water supply stops.
2. Remove the valve cartridge pressure balance spool assembly by proper tools as Fig. 2.
3. When put back or renew the pressure balance spool assembly into the valve body by proper tools, please adjust the arrow indication mark right down direction to make sure the rib of spool assembly fit well(Fig.1). Then push the assembly into the valve correctly.
4. Place the valve cartridge back on the pressure balance spool assembly and tight the whole assembly.(Fig.2)
5. Use adjustable wrench to tight lock nut clockwise direction. (Fig.3)
6. Use screw driver to open stop valve counterclockwise direction. (Fig.4)
7. Check if there is any leakage.
8. Assemble the cap on the valve body by hand. (Fig.4)
9. Cover all of the trim kits if there is no problem found.

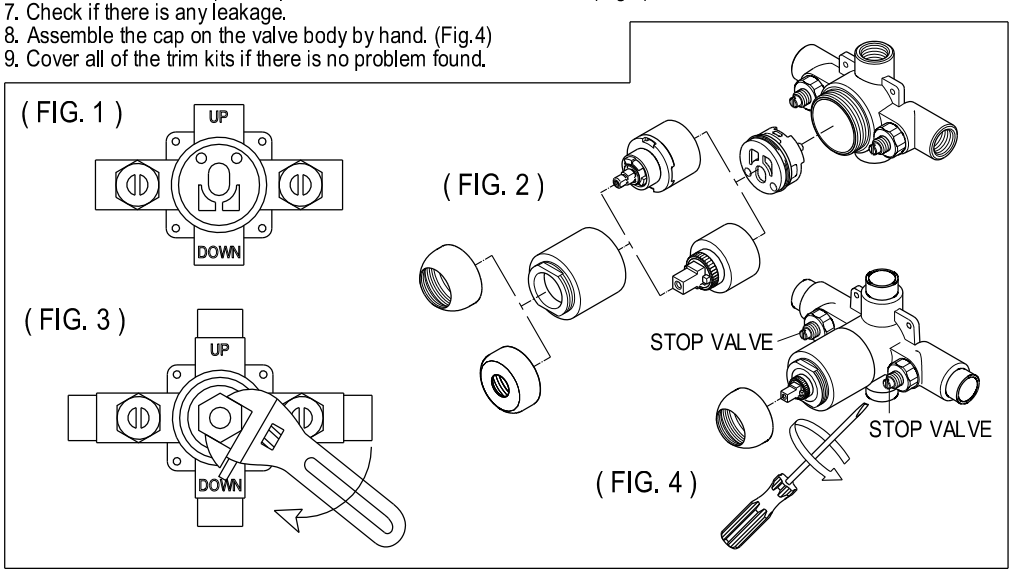

©2011-11-A Kingston Brass

KINGSTON BRASS
THE TRADITION OF FINE BRASS

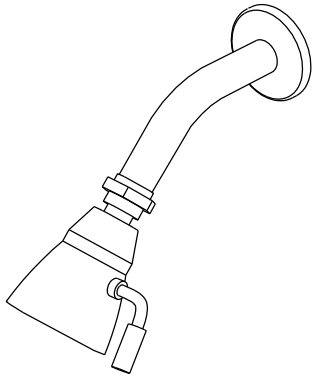

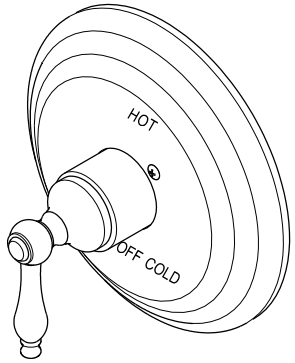

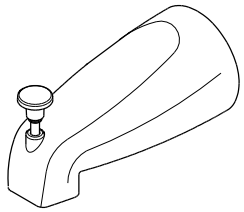

www.kingstonbrass.com
TOLL-FREE CUSTOMER SERVICE: 1-877-2-KBRASS
TECHNICAL SUPPORT E-mail: service@kingstonbrass.com
12775 Reservoir Street, Chino, CA91710

KINGSTON BRASS
THE TRADITION OF FINE BRASS

INSTALLATION INSTRUCTIONS
For Use With KB's Pressure Balancing Valve Tub & Shower Unit

NOTE : FLUSH ALL PIPING
THOROUGHLY BEFORE INSTALLATION .
Teflon tape or pipe joint compound on all threaded connections are required.
SHUT OFF THE WATER SUPPLY VALVES BEFORE INSTALLATION .

Tools required for installation of this product are :

1. Screw Driver
2. Tubing Cutter
3. Teflon Tape
4. Adjustable Wrench
5. Channel-lock Pliers
6. Measuring Tape

Figure 1 :

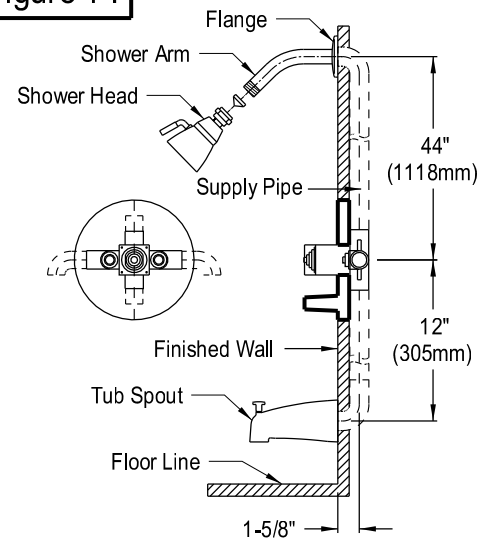

Figure 1A :

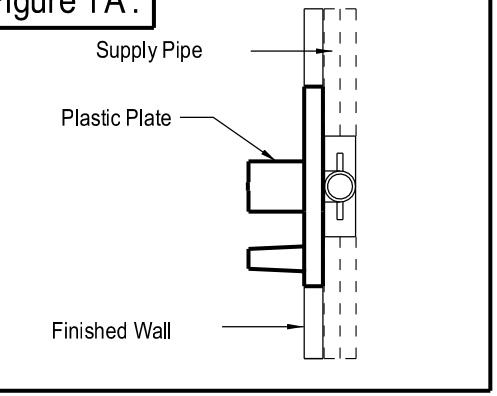

Step 1 :
Install piping and fittings with valve body as shown in Figure 1.

Note: Pex tubing installed from valve body to tub spout restricts water flow that can cause water to drip from showerhead. Always run copper from the valve body to the tub spout.

IMPORTANT :
Valve rough-in is 1-5/8" ± 1/4" from CENTERLINE OF SUPPLIES TO FACE OF FINISH WALL. Facing front of valve body connect hot water to left side "up" and "down" cast into the back of body.
Position "up" to the shower.

Measure the length of pipe from the valve body to the shower arm opening. Connect the pipe to the top thread of the valve body. Slip the flange onto the shower arm and connect shower arm to the supply pipe. Please see Figure 1.

For standard wall installation, secure the valve so that indicated line on plastic plate is flushed with the finished wall surface as shown in Figure 1A .

Figure 2 :

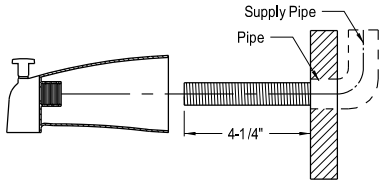

Step 2 :
Measure the length of pipe from the valve body to the tub spout opening. Connect the pipe to the end thread of the valve body. The length of the pipe connecting the spout and supply pipe will be different because of different model number. Please see Figure 2. Wrap teflon's tape on threads of the pipe and thread the tub spout onto the wall.

Figure 3 :

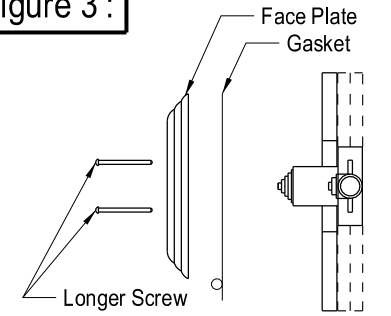

Step 3 :
Unscrew the screws on the plastic plate and remove the plastic plate. Mount gasket onto the back of face plate. Install the diverter handle into the diverter hole of the face plate. Secure the diverter handle by threading the nut onto the face plate as illustration. Position the face plate onto the valve body and thread the longer screws provided tight. Please see Figure 3.

Figure 4 :

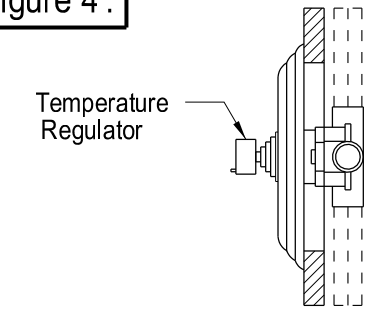

Step 4 :
Reset the temperature regulator on the position you would like the temperature to be.
Turn on the water supply valves to make sure the temperature suits your requirement.
When water is running ,check for any leaks for drip. Tightening connections as necessary.
Please see Figure 4.

Figure 5 :

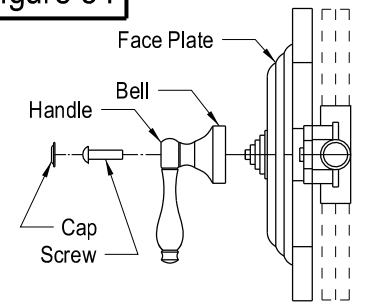

Step 5 :
Thread the bell onto the stem of the valve body . Install the handle onto the bell and secure it by threading the allen screw. Please see Figure 5.

Step 6 :
After installation is completed, turn on the hot and cold water supply valves fully for three minutes. Check for for any leaks or drips. Tighten connections as necessary.