Elements
Of Design

MODEL#: **ED3132**
D Type Rod

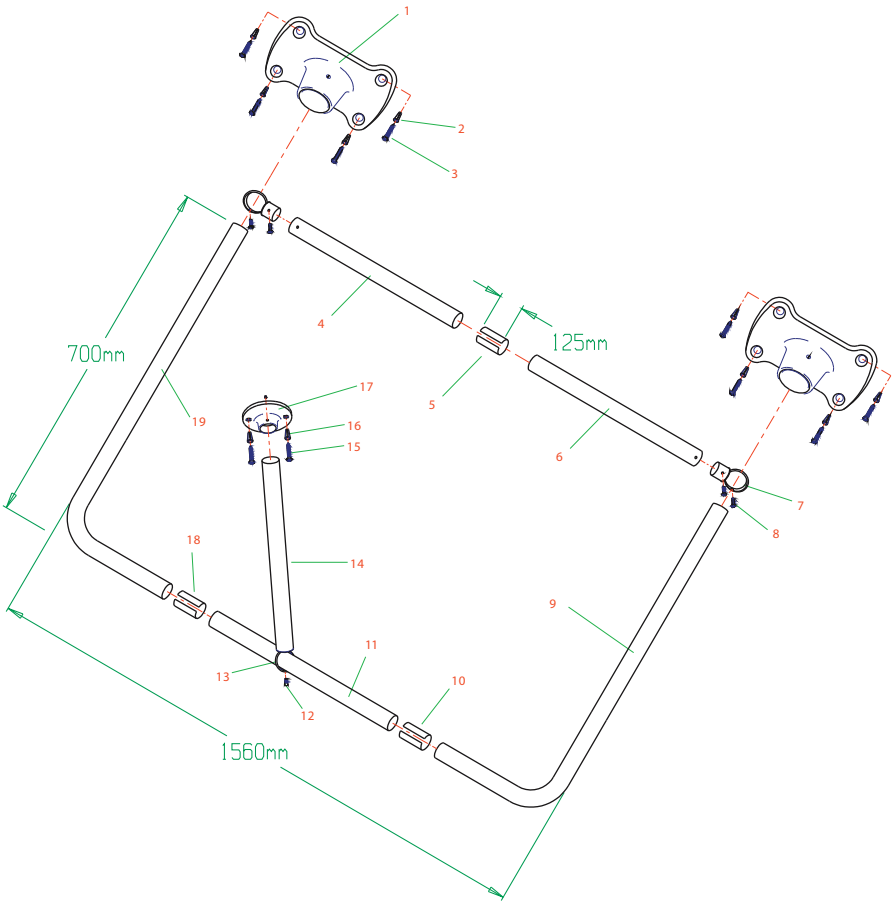

Note: Drawing shows overall style of the product, faucet handle style may be different to the product model number this chart is refering to.

EODFAUCET.COM | T 909.465.6687 F 909.548.0668