LINON

LINON HOME DECOR PRODUCTS,INC.

ASSEMBLY INSTRUCTION

CHELSEA NOOK BENCH
MODEL #90367N2-01-KD-U

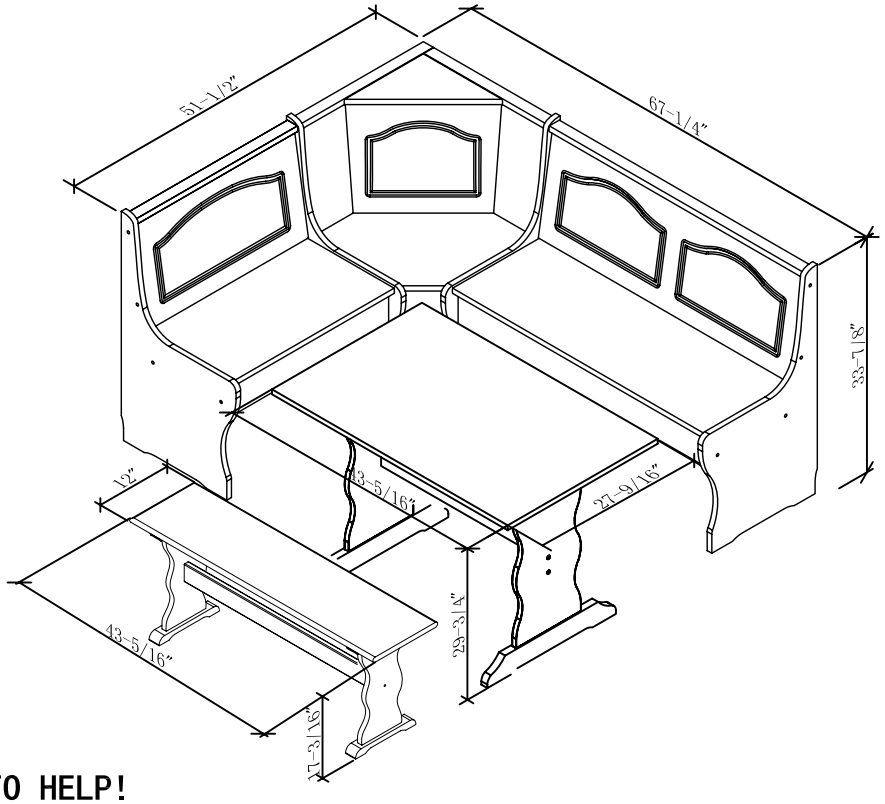

WE ARE HERE TO HELP!

WE DO OUR BEST TO INSURE THAT YOUR FURNITURE ARRIVES IN EXCELLENT CONDITION. IN THE EVENT THAT A PART IS DAMAGED OR MISSING, LINON HOME DECOR WILL BE HAPPY TO PROVIDE YOU WITH REPLACEMENT PARTS, AT NO CHARGE, WITHIN 30 DAYS OF PURCHASE, PROVIDING THE PARTS ARE AVAILABLE IN OUR WAREHOUSE AND THE ITEM PURCHASED IS PART OF OUR CURRENT INVENTORY. **IN ORDER TO RECEIVE SPARE PARTS, AT NO CHARGE, YOU MUST PROVIDE PROOF OF PURCHASE WITHIN 30 DAYS.**

IF YOU NEED ASSISTANCE WITH ASSEMBLY OR REPLACEMENT PARTS, PLEASE CALL LINON CUSTOMER SERVICE, PRIOR TO RETURNING THE ITEM TO THE STORE.

OUR OFFICE IS OPEN MONDAY - FRIDAY 9AM - 5PM, EASTERN STANDARD TIME.

OUR TOLL FREE CUSTOMER SERVICE NUMBER IS: 1-800-262-1852.

OR VISIT OUR WEB SITE WWW.LINON.COM TO ORDER SPARE PARTS AND FOR CARE INSTRUCTIONS ON YOU' RE NEWLY PURCHASED FURNITURE.

LINON

LINON HOME DECOR PRODUCTS,INC.

HARDWARE PACKAGE COUNT (SIMPLE BENCH)

OPEN HARDWARE PACKAGE ON A FLAT SURFACE COVERED WITH NEWSPAPER. COUNT EACH PIECE OF HARDWARE TO MATCH THE QUANTITY NUMBER IN THE HARDWARE IDENTIFICATION COLUMN. CALL CUSTOMER SERVICE IF ANY PARTS ARE MISSING . FOLLOW THE LETTER IDENTIFICATION WHEN READING THE ASSEMBLY DRAWING "D" THROUGH "J"

HARDWARE IDENTIFICATION

D		SCREW 1"LONG 5X25mm	4
E		SCREW 2"LONG 5X50mm	8
F		WOOD HOLE COVER	2
G		WOOD DOWEL 2"LONG 10X50mm	12
H		SCREW 1-3/4"LONG 6X45mm	2
I		NUT	2
J		ALLEN WRENCH	1

IF ANY PARTS ARE MISSING OR DAMAGED IN THIS PACKAGE LINON HOME DECOR WILL BE HAPPY TO PROVIDE YOU WITH REPLACEMENT PARTS, AT NO CHARGE, WITHIN 30 DAYS OF PURCHASE, PROVIDING THE PARTS ARE AVAILABLE IN OUR WAREHOUSE AND THE ITEM PURCHASED IS PART OF OUR CURRENT INVENTORY. **IN ORDER TO RECEIVE SPARE PARTS, AT NO CHARGE, YOU MUST PROVIDE PROOF OF PURCHASE WITHIN 30 DAYS.**

CALL US TOLL FREE AT 1-800-262-1852. OR VISIT OUR WEB SITE WWW.LINON.COM TO ORDER SPARE PARTS AND FOR CARE INSTRUCTIONS ON YOU' RE NEWLY PURCHASED FURNITURE.

PARTS IDENTIFICATION

24- SEAT
25- SEAT TOP SUPPORT (X2)
26- LEGS (X2)
27- SEAT BASE (X2)
28- CROSSBAR

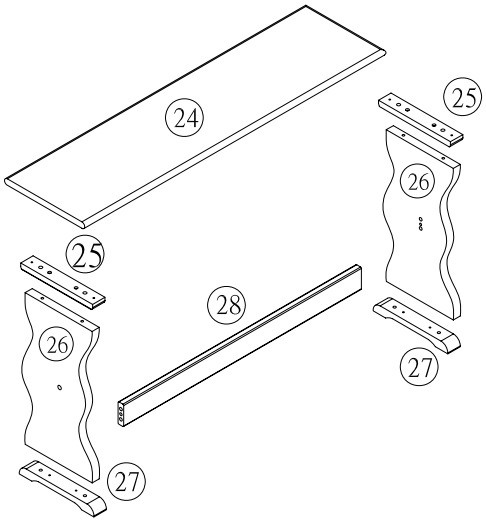

LINON

LINON HOME DECOR PRODUCTS,INC.

STEP 1)

1.1 INSERT (12) WOODEN DOWELS(G) INTO HOLES LOCATED AT UPPER END OF LEGS #26 AND CORSSBAR #28 AS SHOWN IN FIGURE 12.

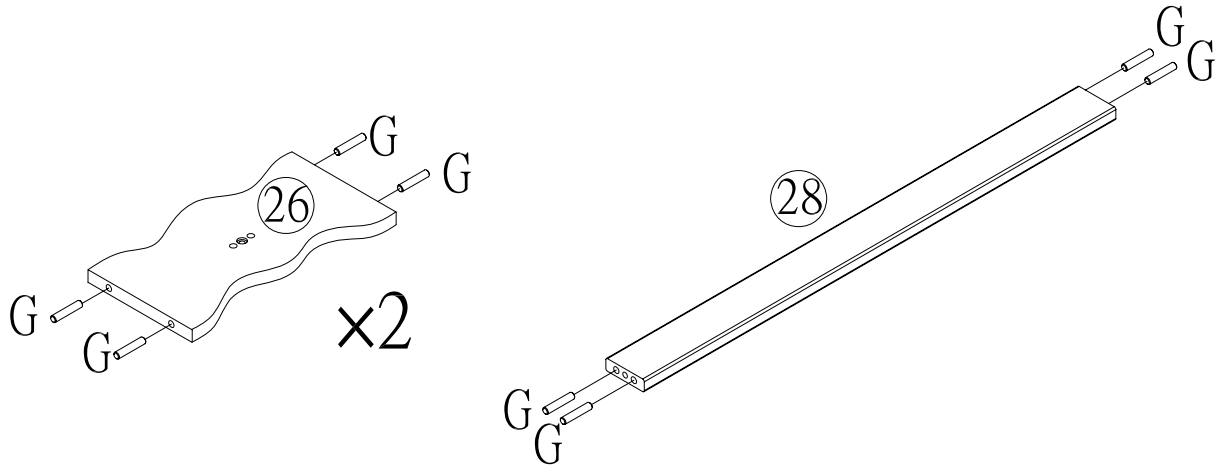

FIGURE 1

STEP 2)

1) ATTACH SEAT BASE #27 TO LEG #26 THROUGH FITTING DOWELS LOCATED AT LOWER END OF LEG #26 INTO HOLES LOCATED ON UPPER EDGE OF BASE #27 USING PRE-DRILLED HOLES AS GUIDE, SECURE CONNECTION WITH (02) SCREWS(E). DRIVEN WITH ALLEN WRENCH(J) AS SHOWN IN FIGURE 2.REPEAT PROCEDURE FOR SECOND LEG #26.

2) ATTACH TABLE TOP SUPPORT #25 TO LEG #26 FITTING THE DOWELS LOCATED ON UPPER END OF LEG #26 INTO HOLES LOCATED ON SUPPORT #25. USING PRE-DRILLED HOLES AS GUIDE,SECURE CONNECTION WITH (02) SCREWS(E) DRIVEN WITH ALLEN WRENCH(J)AS SHOWN IN FIGURE 2. REPEAT PROCEDURE FOR SECOND TOP SUPPORT #25.

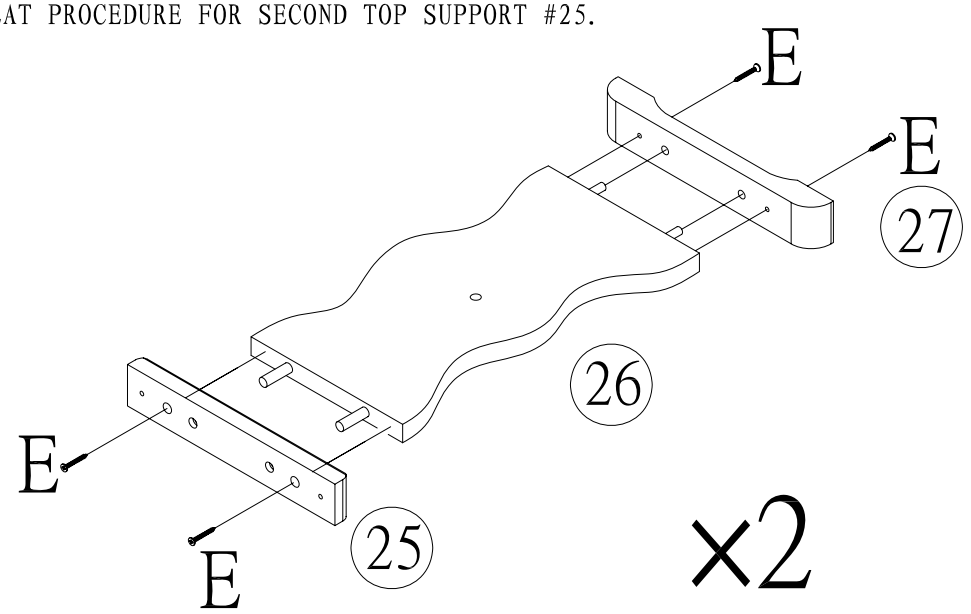

FIGURE 2

LINON

LINON HOME DECOR PRODUCTS,INC.

STEP 3)

1) ATTACH CROSSBAR #28 TO LEGS #26 INSERTING WOOD DOWELS LOCATED AT ENDS OF CROSSBAR INTO HOLES LOCATED ON LEGS. SECURE CONNECTION USING (02) SCREWS(H) AND (02) NUTS(I). AS SHOWN IN FIGURE 3.
2) INSERT (02) WOOD HOLE COVERS(F) INTO HOLES LOCATED AT LEGS #26 AS SHOWN IN FIGURE 3.

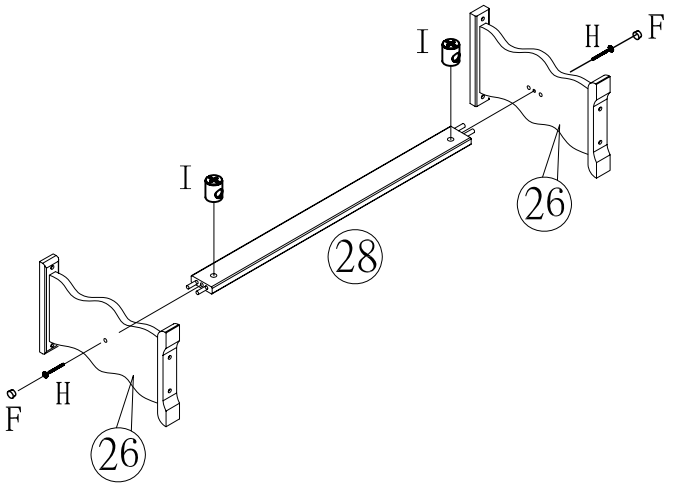

FIGURE 3

STEP 4)

1) ATTACH ASSEMBLED LEGS TO SEAT #24 THROUGH FITTING WOOD DOWELS PRESENT IN UPPER SIDE OF SEAT TOP SUPPORTS #25 INTO HOLES LOCATED UNDERNEATH OF SEAT #24 AS SHOWN IN FIGURE 4. IT SERVES AS GUIDE ENABLING YOU TO CONNECT THE LEGS IN CORRECT POSITION.
2) USING PRE-DRILLED HOLES AS GUIDE,SECURE CONNECTION WITH (04) SCREWS(D) DRIVEN WITH SCREWDRIVER AS SHOWN IN FIGURE 4.
3) USING HELP, GENTLY FLIP SEAT WITH BOTH LEGS ON FLOOR AS SHOWN ON PAGE 1.HOLD ON ALLEN WRENCH(J) AND PREIODICALLY CHECK ALL CONNECTIONS FOR TIGHTNESS.

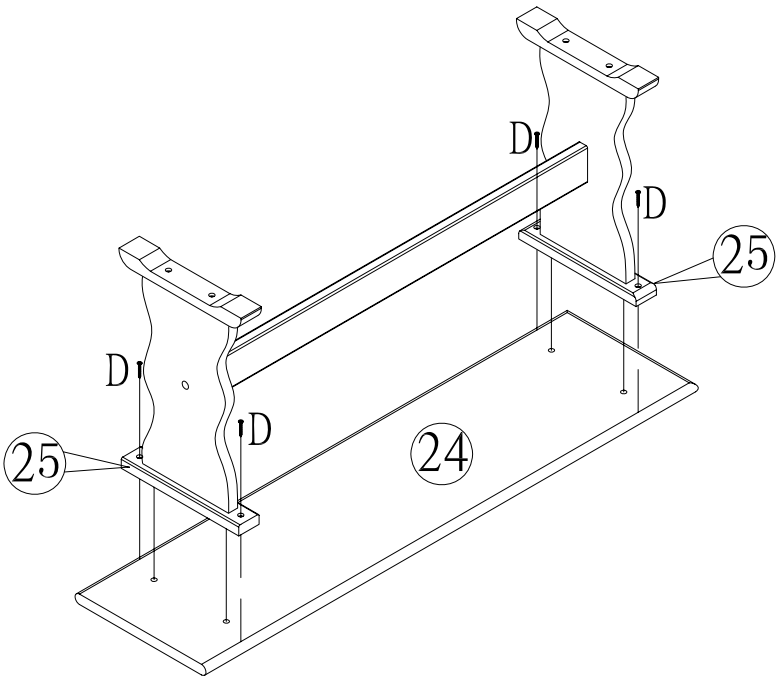

FIGURE 4

LINON

LINON HOME DECOR PRODUCTS,INC.

LIMITED 6 MONTHS WARRANTY

WHAT IS COVERED

This product is covered under our manufacturer's 6 months limited warranty (Linon Home Décor Products). To ensure your complete satisfaction, this warrants to the original purchaser that the Linon supplied item is free from defects in material and workmanship, as of the date of purchase, and that it will, under normal use and proper care, remain so for six months after the date of purchase.

Replacement of missing or initially defective parts will be sent, at no charge, for a period of 30 days from the date of purchase with valid proof of purchase providing the parts are available in our warehouse and the item purchased is part of our current inventory.

WHAT IS NOT COVERED

It remains the customer's responsibility for freight and packaging charges to and from the customer service center. Labor and material charges to remove or replace parts under this warranty are not covered.

This warranty does not cover: Furniture used for commercial purposes, failures caused by improper care, unreasonable or abusive use, freeze damage, acts of God, rust, purchased parts or return freight and packaging charges. Proof of purchase (dated register receipt) is required for warranty claims.

HOW TO OBTAIN SERVICE

For further information, please contact our customer service department, c/o Linon Home Décor Products, Inc., between 9:00 AM and 5:00 PM Eastern Standard Time, Monday through Friday:

LINON HOME DÉCOR PRODUCTS, INC.,
CUSTOMER SERVICE DEPARTMENT
22 JERICHO TURNPIKE
MINEOLA,NY 11501

Toll free number : 1 - 800 - 262 - 1852 Customer Service

Visit our web site www.Linon.com to order spare parts and for care instructions on you're newly purchased furniture.