SOUTHERN ENTERPRISES INC.

NOTE…. This product has been engineered for
easy assembly and constructed for durability.
Please take time to read and follow assembly instructions.

WINDOW PANE DOUBLE DOOR MEDIA CABINET
STYLE NO. MS1073 CHERRY FINISH MS1074 OAK FINISH

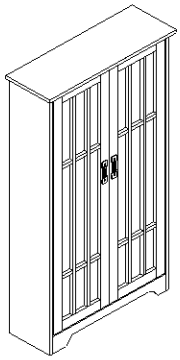

HARDWARE LIST

(1) 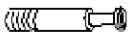 Cam Bolt 14 PCS	(2) Cam Lock 14 PCS	(3) Wood Dowel 22 PCS	(4) Phillip Bolt 4PCS	(5) Round Head Wood Screw 52 PCS	(6) Upward 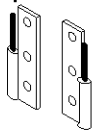 6-L 6-R Side Panel Hinge 2 PCS EACH
(7) Flat Head Wood Screw 24 PCS	(8) 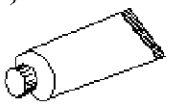 Glue 1PC	(9) 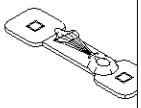 Door Knob 2PCS	(10) Shelf Support 16PCS	(11) Plastic Sleeve 2PCS	(12) Hanger 2PCS
(13) Glass Holder 24PCS	(14) Long Wood Screw 2PCS	(15) 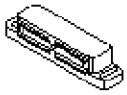 Magnet 1PC	(16) Upward 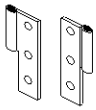 16-L 16-R Door Hinge 2PCS EACH		

Please count, identify and compare parts and hardware list to be sure all parts are present. It may help to divide parts and label them to correspond with part list. Extra hardware may be included. If any items are missing, please contact our parts/service department at (800) 633-5096 or in Dallas (972) 869-0111/ 9am – 4pm Mon-Fri Central time. Missing or damaged hardware and/ or parts will be replaced free of charge. WE DO NOT SELL PARTS. WE DO NOT RECOMMEND MODIFYING PRODUCT (S) AND WE ARE NOT RESPONSIBLE FOR ANY DAMAGES DUE TO PRODUCT MODIFICATION (S). If this product has not been purchased from our retail affiliates (within 9 months), we are under no obligation to provide parts or replacement merchandise. We will ship parts if available. This is not a warranty.

Style No.
MS1073 CHERRY FINISH
MS1074 OAK FINISH

PARTS REPLACEMENT FORM

Customer Name

_____

Street, City, State, Zip

_____

_____

PARTS LETTER	PARTS DESCRIPTION	QUANTITY NEEDED

Please indicate where you purchased this item.
Store/ website/ catalog

_____

Please indicate color/ size/ style number.

_____ / _____ / _____

SOUTHERN ENTERPRISES INC.
P.O. Box 59996 Dallas, Texas 75229

WOOD PARTS

A. Top Panel 1PC 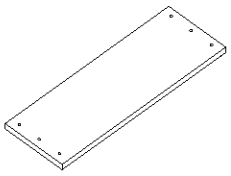	D. Center Panel 1PC 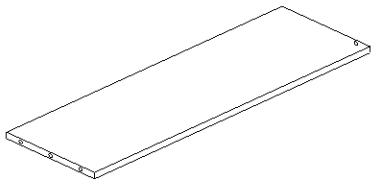	E. Front Bottom Rail 1PC 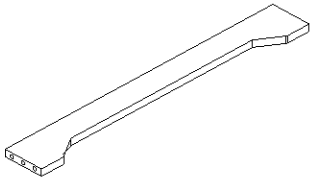
F. Bottom Panel 1PC 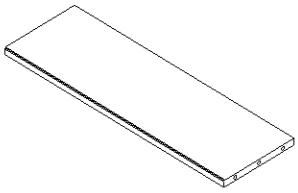	G. Back Panel 2PC 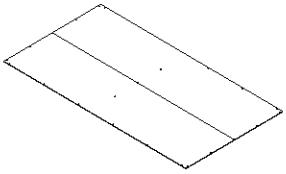	H. Door Glass 2PCS 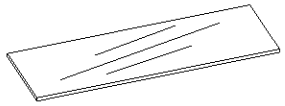
L. Adjustable Shelf 4PCS 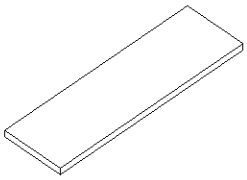	J. Left Door Frame 1PC K. Right Door Frame 1PC 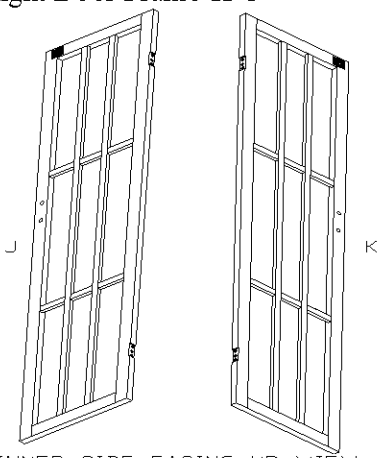	B. Right Side Panel 1PC C. Left Side Panel 1PC 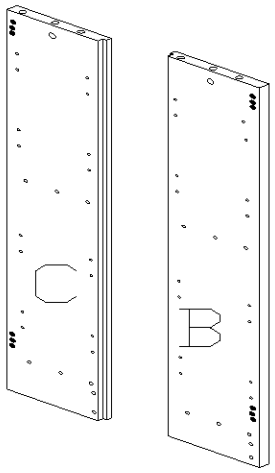
M. Bottom Strengthen Bar 1 PC N. Top Strengthen Bar 1 PC 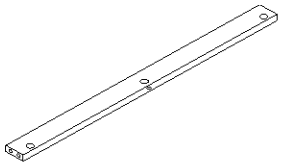		

INSTALLATION PROCEDURE

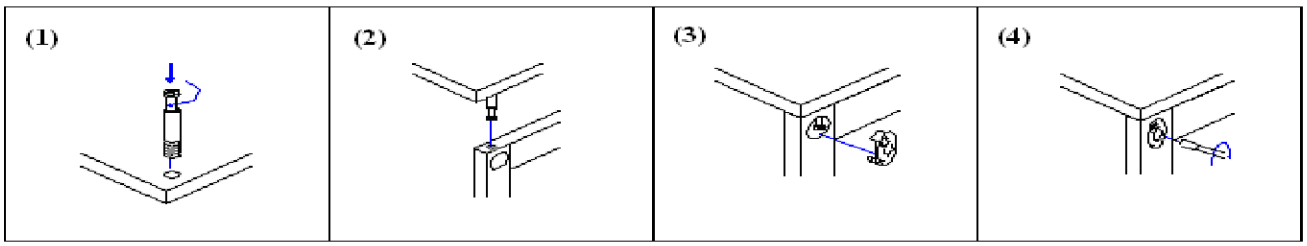

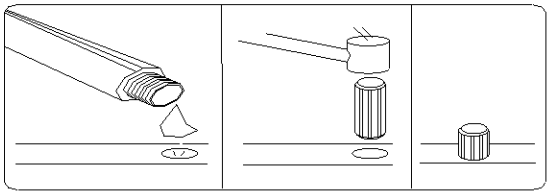

APPLY GLUE 1/4 FULL INTO HOLES BEFORE PLACING ANY WOOD DOWELS INTO POSITION. Use rubber hammer only when needed.

ASSEMBLY INSTRUCTIONS

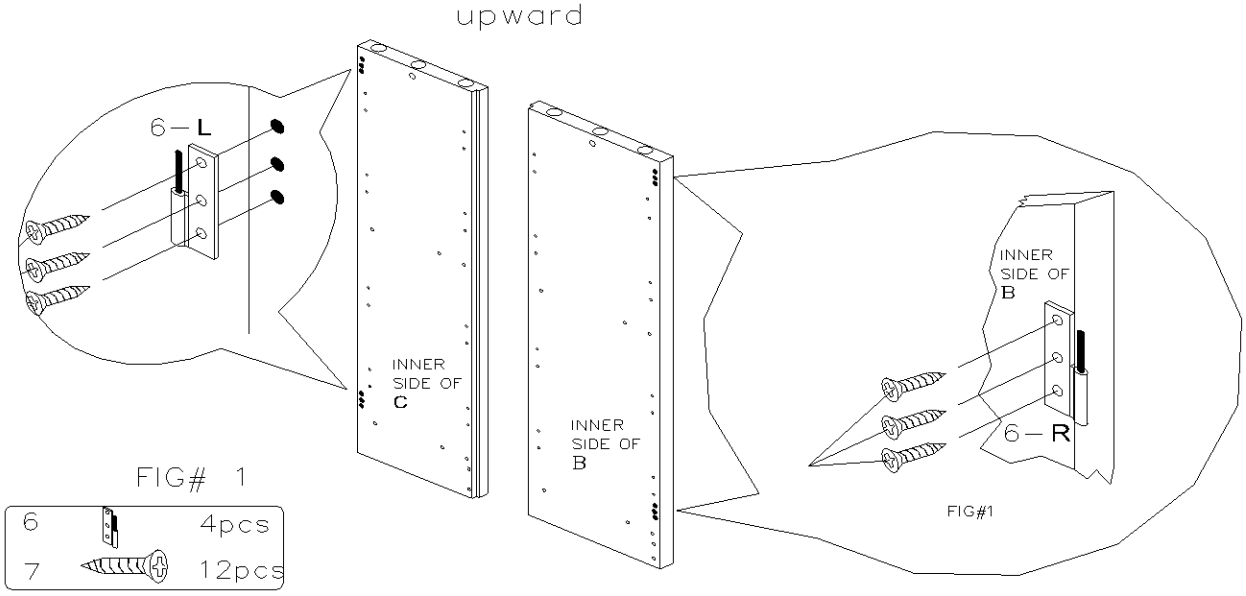

FIG# 1

6		4pcs
7		12pcs

STEP#1

PLACE BOTH SIDE PANELS (B)&(C) ON A SOFT SURFACE WITH INNER SIDES FACING UPWARD. THE 3 HOLES ON TOP ENDS OF BOTH SIDE PANELS (B)&(C) SHOULD BE UPWARD. **(SEE FIG#1)**

IDENTIFY SIDE PANEL HINGES (6-R). INSERT FLAT HEAD WOOD SCREWS (7) THROUGH HOLES ON SIDE PANEL HINGES (6-R) INTO PILOT HOLES ON UPPER AND LOWER ENDS OF THE RIGHT SIDE PANEL (B).

(PLEASE NOTE, THE DIRECTION OF HINGE SHOULD BE UPWARD AS SHOWN ON FIG#1)

IDENTIFY SIDE PANEL HINGES (6-L). INSERT FLAT HEAD WOOD SCREWS (7) THROUGH HOLES ON SIDE PANEL HINGES (6-L) INTO PILOT HOLES ON UPPER AND LOWER ENDS OF THE LEFT SIDE PANEL (C).

FIG# 2-B

5		24pcs
16		4pcs
7		12pcs
13		24pcs

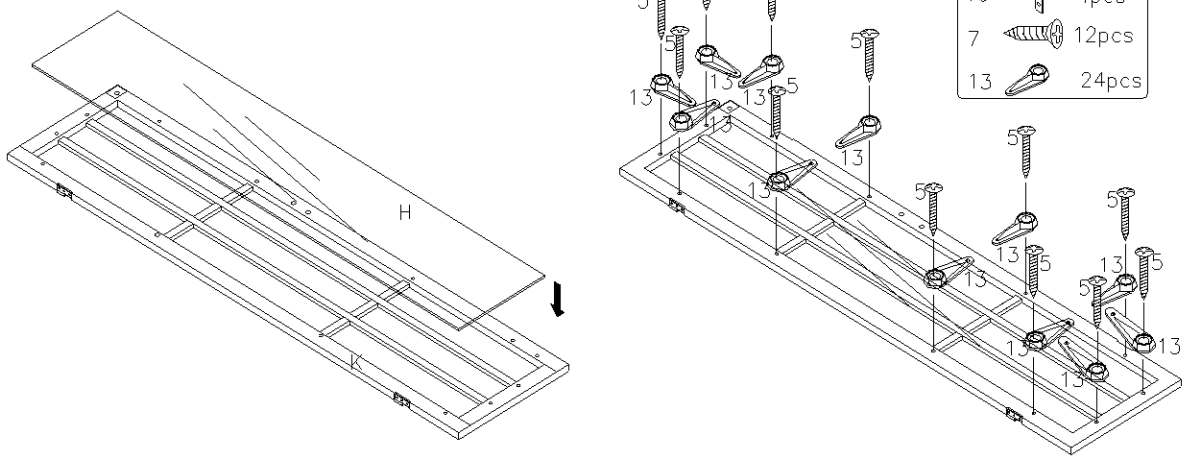

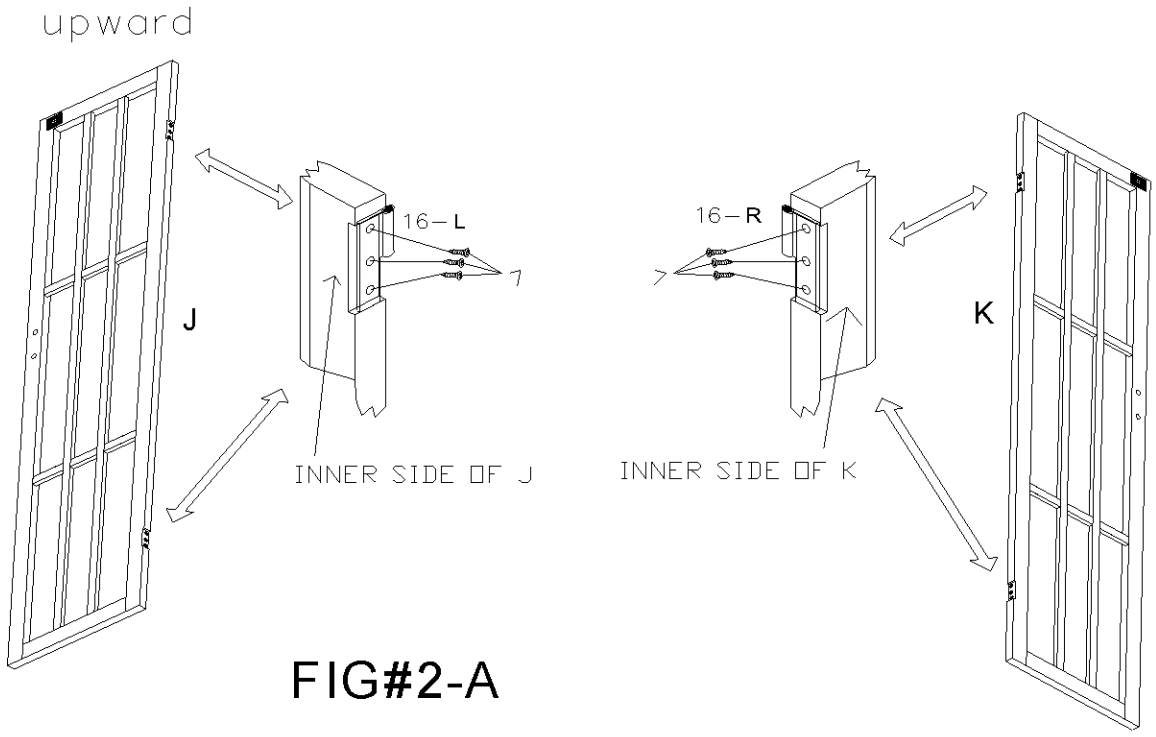

FIG#2-A

STEP#2A
PLACE RIGHT DOOR FRAME (K) ON A SOFT SURFACE WITH INNER SIDE FACING UPWARD. **(SEE FIG# 2)**

IDENTIFY DOOR HINGES (16-R). INSERT FLAT HEAD WOOD SCREWS (7) THROUGH HOLES ON DOOR HINGES (16-R) INTO PILOT HOLES ON UPPER AND LOWER ENDS OF THE RIGHT SIDE DOOR FRAME (K).
(PLEASE NOTE, THE DIRECTION OF HINGE SHOULD BE UPWARD AS SHOWN ON FIG#2)

IDENTIFY DOOR HINGES (16-L). INSERT FLAT HEAD WOOD SCREWS (7) THROUGH HOLES ON DOOR HINGES (16-L) INTO PILOT HOLES ON UPPER AND LOWER ENDS OF THE LEFT DOOR FRAME PANEL (J).

STEP#2B.
PLACE DOOR GLASS (H) TO INNER SIDES OF DOOR FRAMES (J & K).
INSERT ROUND HEAD WOOD SCREWS (5) THROUGH GLASS HOLDERS (13) AND SCREW INTO PILOT HOLES ON DOOR FRAMES (J&K). **(SEE FIG# 2A)**

FIG# 3

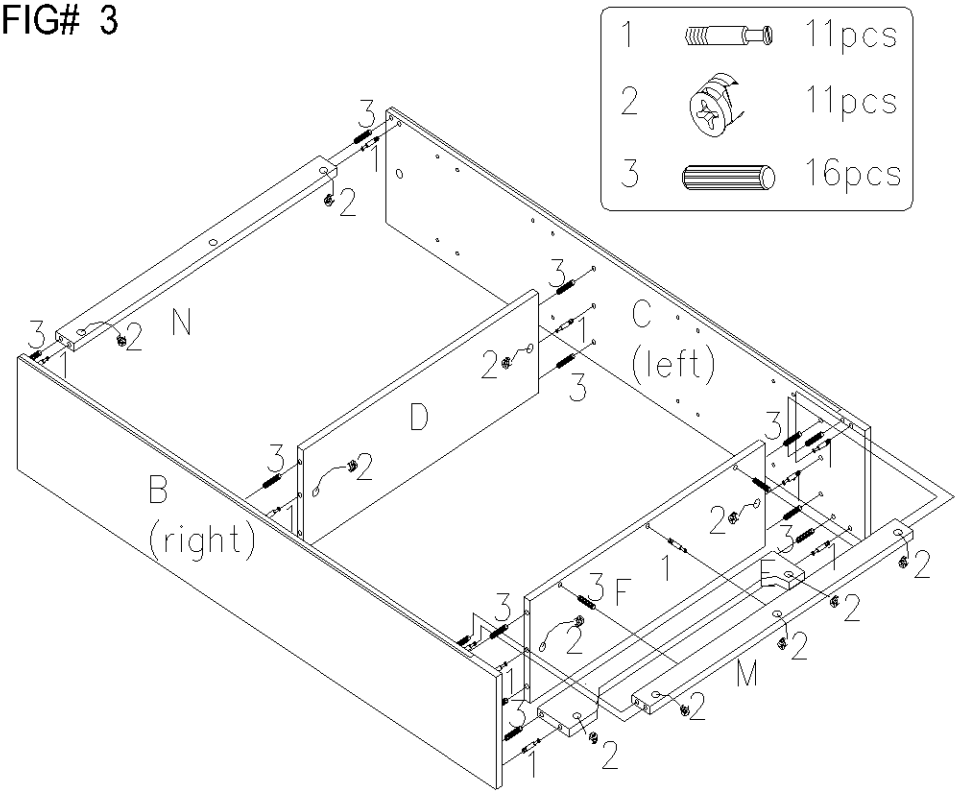

STEP# 3

(See Fig#3) INSERT WOOD DOWELS (3) INTO HOLES ON FOLLOWING PARTS: BOTH ENDS AND BOTTOM SIDES OF TOP PANEL (A) AND BOTTOM PANEL (F), BOTH ENDS OF STRENGTHEN BARS (M & N), FRONT BOTTOM RAIL (E), & CENTER PANEL (D). SCREW CAMBOLTS (1) INTO PRE-INSERTED NUTS ON TOP PANEL (A) AND BOTH SIDE PANELS (B&C).

ATTACH FRONT BOTTOM RAIL (E) TO RIGHT SIDE PANEL (B).
PUSH WOOD DOWELS (3) ON END OF FRONT BOTTOM RAIL (E) INTO HOLES ON SIDE PANEL PANEL (B). INSERT CAM LOCKS (2) INTO HOLES ON FRONT BOTTOM RAIL (E), THEN FASTEN TOGETHER BY TIGHTENING CAM LOCKS (2) INTO CAM BOLTS (1) ON SIDE PANEL (B).

ATTACH BOTTOM STRENGTHEN BAR (M) TO BOTTOM PANEL (F).
PUSH TWO WOOD DOWELS (3) ON BOTTOM PANEL (F) INTO HOLES ON UPPER SIDE OF BOTTOM STRENGTHEN BAR (M). THEN, INSERT CAM LOCKS (2) INTO CENTER HOLES ON BOTTOM STRENGTHEN BAR (M) TO FASTEN BOTH PARTS TOGETHER.

ATTACH BOTH BOTTOM STRENGTHEN BAR (M) & BOTTOM PANEL (F) TO RIGHT SIDE PANEL (B).
PUSH WOOD DOWELS (3) ON END OF BOTH PARTS INTO HOLES ON SIDE PANEL (B). INSERT CAM LOCKS (2) INTO HOLES ON BOTTOM PANEL (F) AND BOTTOM STRENGTHEN BAR (M) AND FASTEN TO SIDE PANEL (B) BY TIGHTENING CAM LOCKS (2) TO CAM BOLTS (1) ON SIDE PANEL (B).

ATTACH CENTER PANEL (D) AND TOP STRENGTHENS BAR (N) TO RIGHT SIDE PANEL (B).
PUSH WOOD DOWELS (3) ON END OF BOTH PARTS INTO HOLES ON SIDE PANEL (B). INSERT CAM LOCKS (2) INTO HOLES ON CENTER PANEL (D) AND TOP STRENGHTEN BAR (N), AND FASTEN TO SIDE PANEL (B) BY TIGHTENING CAM LOCKS (2) TO CAM BOLTS (1) ON SIDE PANEL (B). (**SEE FIG# 3)**

DUPLICATE ABOVE STEPS FOR LEFT SIDE PANEL (C).

STEP #4A

ATTACH BOTH DOOR FRAMES (J&K) TO BOTH SIDE PANELS (B&C) BY HOOKING DOOR HINGES (16) ONTO SIDE PANEL HINGES (6). **(SEE FIG# 4)**

INSERT PHILLIP BOLTS (4) THROUGH DOOR FRAMES (J&K) TO TIGHTEN DOOR KNOBS (9) TO EACH DOOR FRAME (J&K).

STEP# 4B

ATTACH TOP PANEL (A) TO BOTH SIDE PANELS (B & C) AND TOP STRENGHTEN BAR (N). TIGHTEN MAGNET (15) TO TOP PANEL (A) WITH ROUND HEAD WOOD SCREWS (5). (SEE FIG# 4 ONLY)

NEXT, ATTACH TOP PANEL (A) ONTO BOTH SIDE PANELS (B & C) AND TOP STRENGTHEN BAR (N). INSERT AND PUSH DOWN CAM BOLTS (1) AND WOOD DOWELS (3) ON TOP PANEL (A) INTO HOLES ON SIDE PANELS (B & C) AND TOP STRENGTHEN BAR (N).

INSERT CAM LOCKS (2) INTO HOLES ON BOTH SIDE PANELS (B & C) AND TOP STRENGTHEN BAR (N). TO FASTEN, TIGHTEN CAM LOCKS (2) ON SIDE PANELS (B & C) AND ALSO ON BACK SIDE OF TOP STRENGTHEN BAR (N) TO CAM BOLTS (1) ON TOP PANEL (A). **(SEE FIG# 4)**

FIG# 4

1		3pcs
2		3pcs
3		6pcs
4		4pcs
5		2pcs
9		2pcs
15		1pc

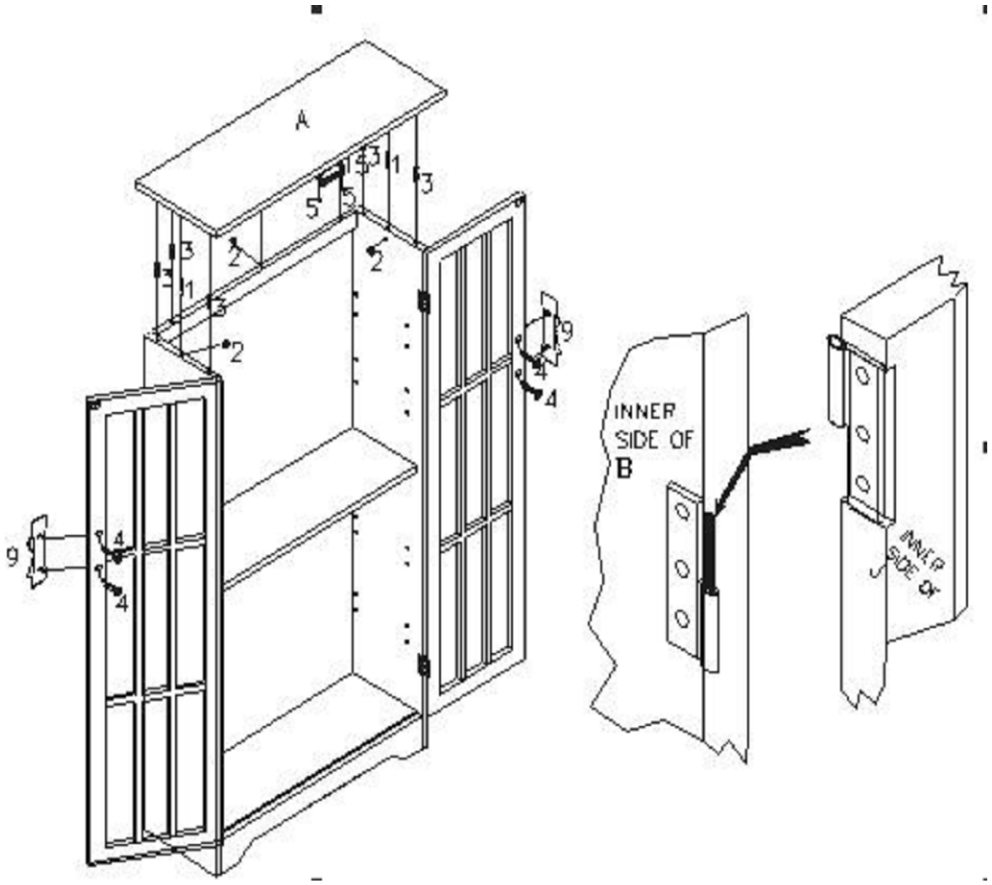

STEP #5.
STAND THE UNIT UPRIGHT. ATTACH BACK PANEL (G) TO BACK SIDE OF THE UNIT. FASTEN BACK PANEL (G) TO CENTER PANEL (D), BOTH SIDE PANELS (B & C), AND STRENGTHEN BARS (M & N), BY TIGHTENING ROUND HEAD WOOD SCREWS (5) THROUGH HOLES ON BACK PANEL (G). **(SEE FIG# 5)**

FIG# 5

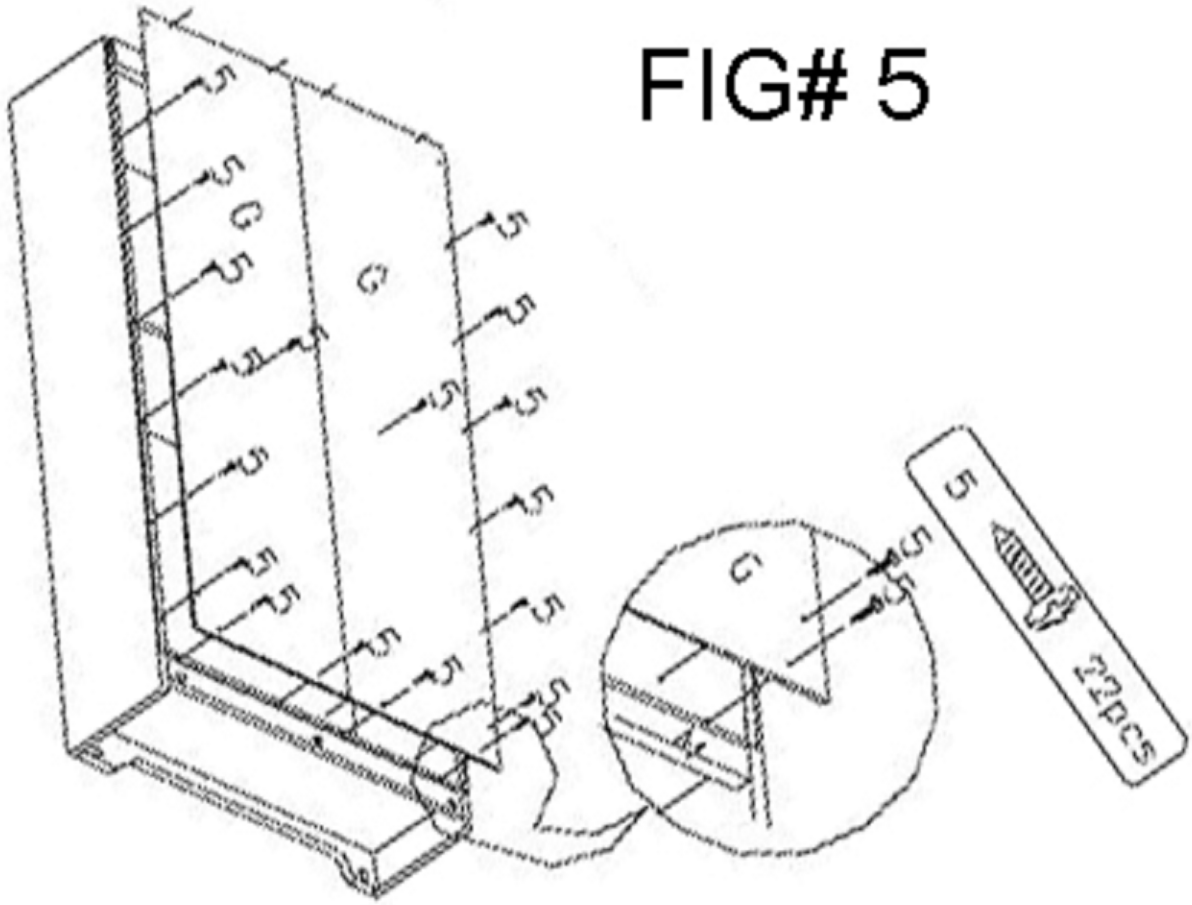

STEP #6

INSERT SHELF SUPPORTS (10) TO INNER SIDES OF BOTH SIDE PANELS (B&C), THEN PLACE ADJUSTABLE SHELF PANELS (L) ONTO SHELF SUPPORTS. **(SEE FIG# 6)**

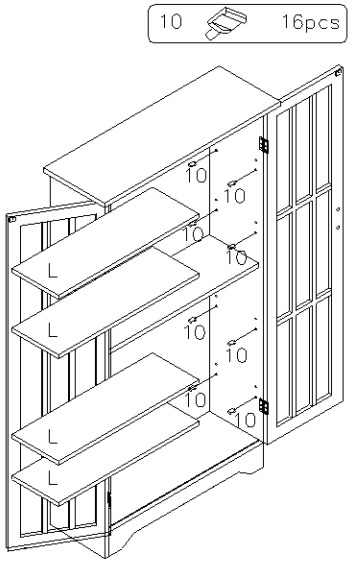

FIG# 6

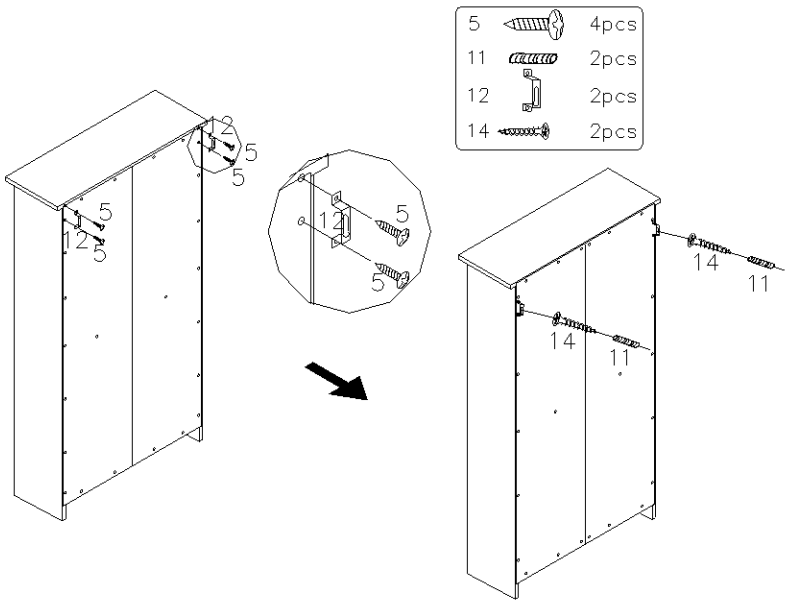

FIG# 7

STEP #7

FASTEN HANGER (12) TO BACKS OF BOTH SIDE PANELS (B & C) WITH ROUND HEAD WOOD SCREWS (5). POSITION CABINET AGAINST FIXED WALL AND ATTACH USING PLASTIC SLEEVE (11) AND LONG WOOD SCREWS (14). **(SEE FIG# 7)**

YOUR BEAUTIFUL WINDOW PANE MEDIA CABINET IS FINISHED AND READY TO USE.

THIS PRODUCT IS NOT INTENDED FOR COMMERCIAL USE.

SOUTHERN ENTERPRISES, INC

P.O. Box 59996 Dallas, Texas 75229