Select Cherry Finish

SAUDER®

414238 **2-Shelf Bookcase**

One adjustable shelf

Quick and easy assembly with patented slide-on moldings

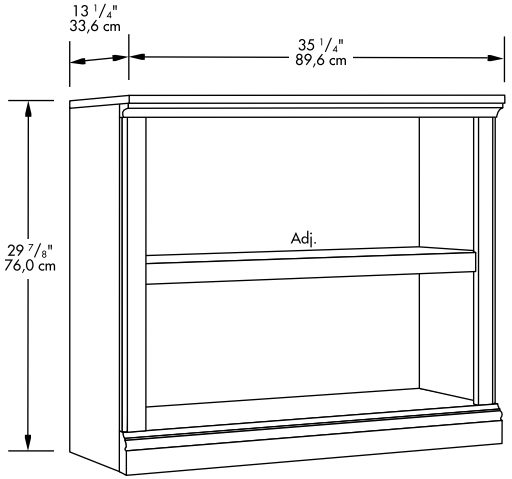

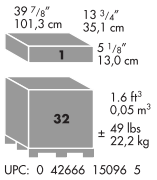

UPC: 0 42666 15096 5

SAUDER®

Due to product improvements, these features are subject to change without notice.

502 Middle St. PO Box 156 Archbold, Ohio 43502

© 2012 Sauder Woodworking Co. 10/12

MADE IN USA