ASSEMBLY INSTRUCTIONS

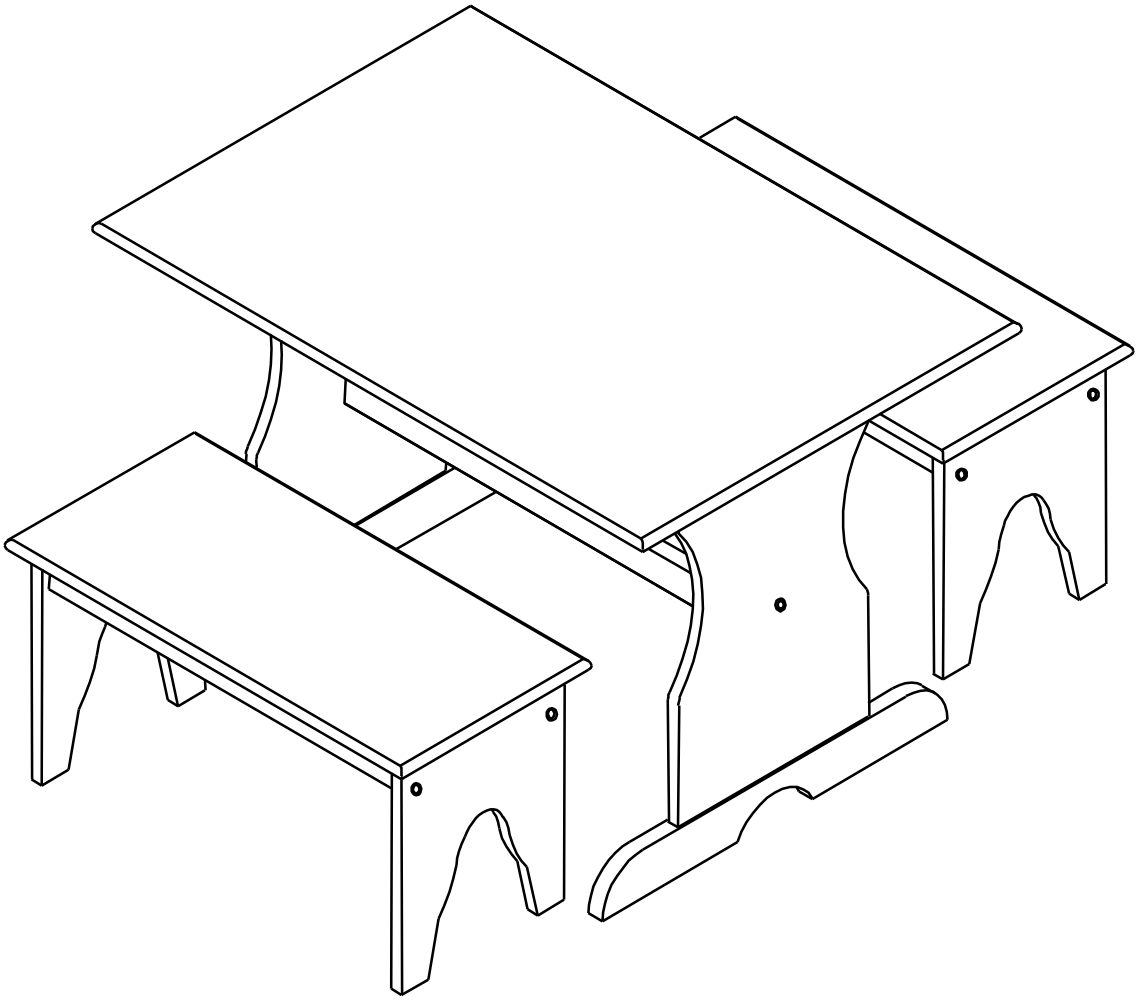

Description : 3 PC KIDS SET – TRESTLE TABLE WITH 2 BENCHES
Item No. : JT-3027

ITEM NO.: JT-3027
REVISED APR 04, 2013
Printed in Vietnam

BEFORE ASSEMBLY

Thank you for purchasing this quality product. This product has been designed for easy assembly and constructed for durability. All parts were checked prior to packaging to insure quality. Prior to beginning assembly, however, make sure all parts and hardware are included and free of obvious defect. If a part is missing or defective, please contact the store where purchased. If hardware is missing, or you need help with assembly, please call toll free 888-944-8396.

IMPORTANT NOTE:

- Place all wooden parts on a clean and smooth surface such as a rug or carpet to avoid the parts from being scratched.
- Remove all wrapping material, including staples & packing straps before you start to assemble.
- DO NOT tighten all screws, bolts until completely assembled.
- Keep all hardware parts out of reach of children.

ASSEMBLY TOOLS REQUIRED

NOT INCLUDED

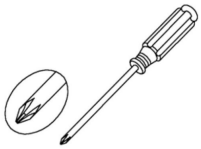

PART LIST

When unpacking, please be careful not to discard any parts with the packaging. Before continuing, please make sure you have the following parts:

1/ BENCH (per piece):

NO	Description	Qty	Sketch	NO	Description	Qty	Sketch
A	Leg	2	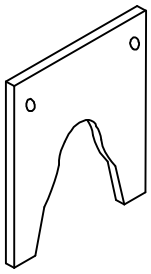	B	Seat	1	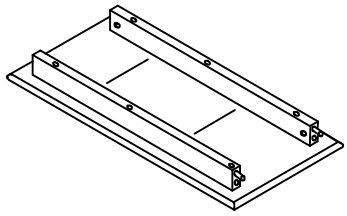

2/ TABLE :

NO	Description	Qty	Sketch	NO	Description	Qty	Sketch
A	Top	1	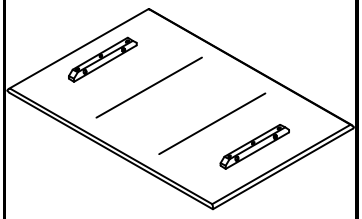	B	Leg	2	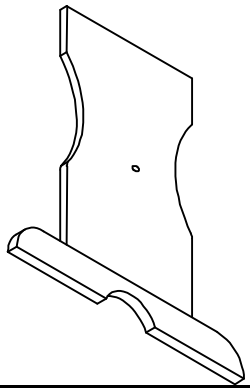
C	Cross bar	1	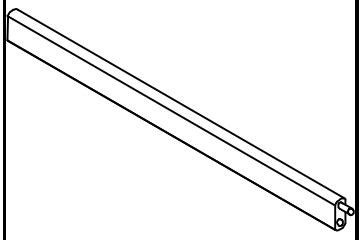				

HARDWARE LIST

When unpacking, please be careful not to discard any parts with the packaging. Before continuing, please make sure you have all of the following hardware in a large bag:

1/ BENCH: Note: some hardware is the same for the table as it is with the bench

NO	Description	Qty	Sketch	NO	Description	Qty	Sketch
1	Bolt (M6x45mm)	8		2	Barrel nut (M6x13mm)	8	
3	Allen key (4mm)	1					

2/ TABLE: Note: some hardware is the same for the table as it is with the bench

NO	Description	Qty	Sketch	NO	Description	Qty	Sketch
1	Long bolt (M6x45mm)	2		2	Short bolt (M6x30mm)	4	
3	Barrel nut (M6x13mm)	2		4	Allen key (4mm)	1	

STEP 1 - BENCH

Attach legs (A) to the top (B) by using bolts (1) and barrel nut (2). Tighten with allen key (3) as shown below.

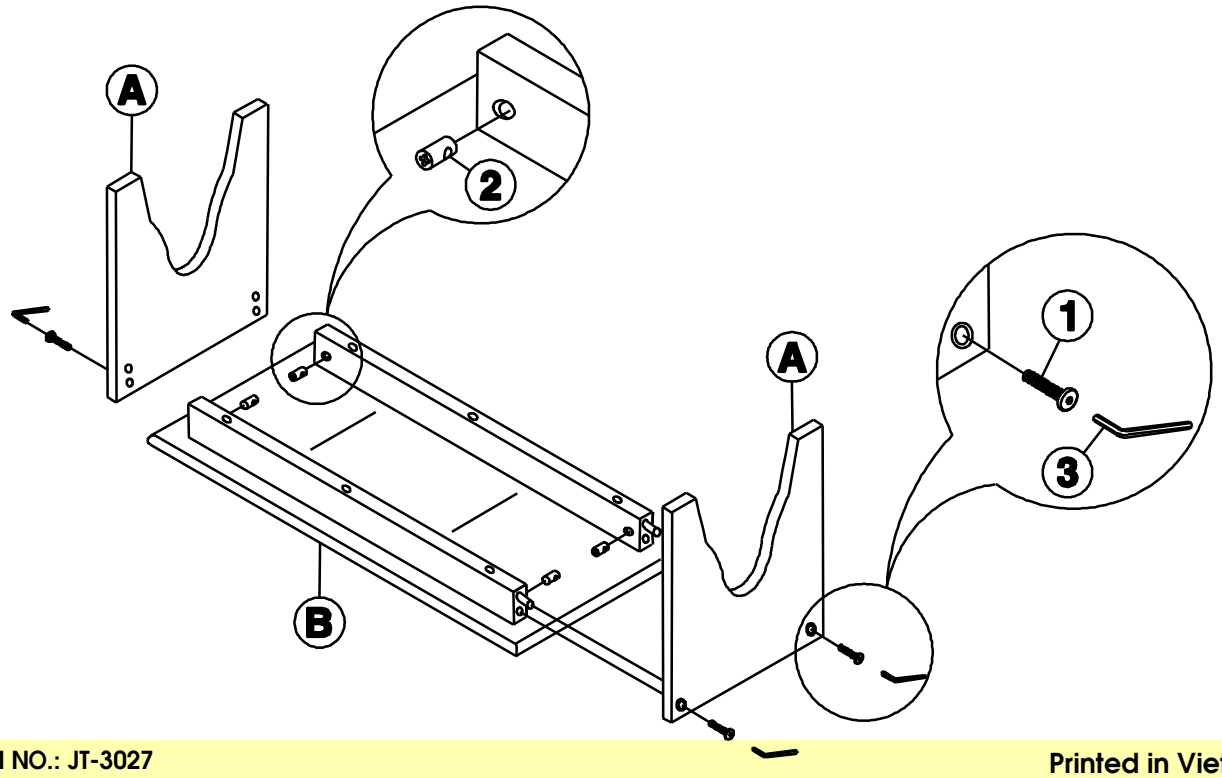

STEP 2 - TABLE
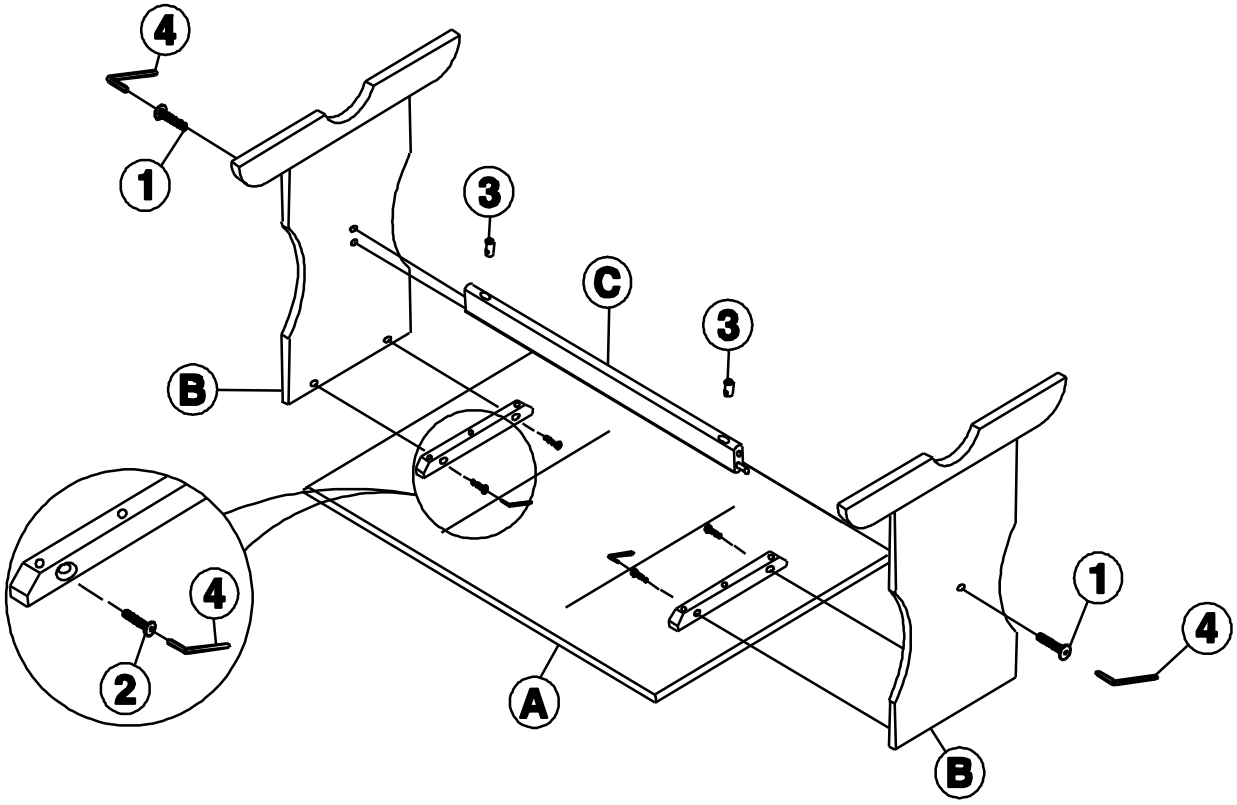
Attach legs (B) to the cross bar (C) with bolts (1) and barrel nut (3).Tighten with allen key (4) as shown below.
Attach legs (B) to the top (A) using bolts (2).Tighten with allen key (4).