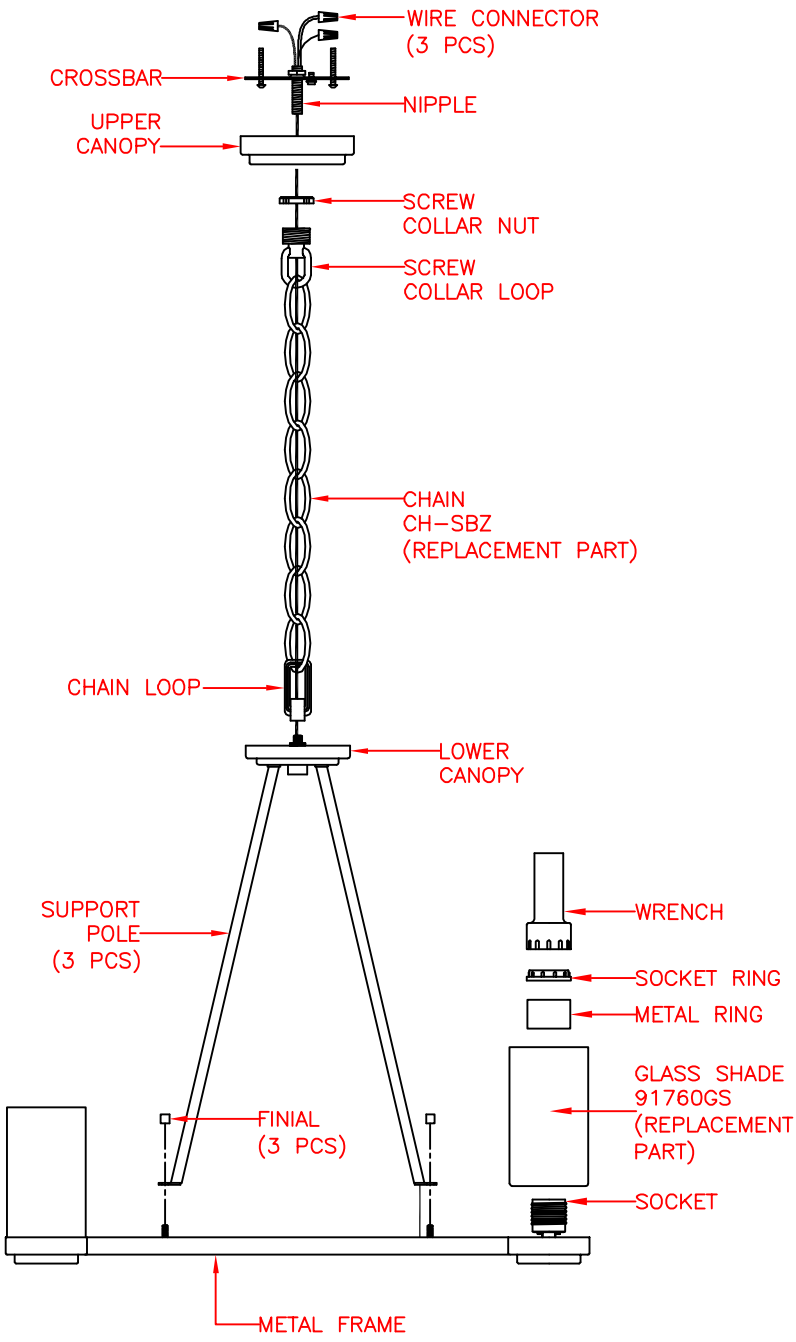

AVAILABLE PARTS ARE:
91760GS (GLASS SHADE)
CH-SBZ (CHAIN)

MODEL: 91766SBZ

ASSEMBLY INSTRUCTIONS

READ AND SAVE THESE INSTRUCTIONS

READ INSTRUCTIONS ALL THE WAY THROUGH PRIOR TO ASSEMBLY.

THIS FIXTURE SHOULD TAKE APPROXIMATELY 20 MINUTES TO ASSEMBLE.

MAKE SURE ALL PARTS ARE FIRMLY TIGHTENED.

TOOLS: YOU WILL NEED THE FOLLOWING TOOLS OR EQUIPMENT: LADDER, SCREWDRIVER, ADJUSTABLE WRENCH, WIRE CUTTERS AND PLIERS.

UNPACK THE FIXTURE

YOU SHOULD HAVE RECEIVED THE FOLLOWING PARTS IN THE PACKAGE: UPPER CANOPY, CHAIN, CHAIN LOOP, LOWER CANPOY WITH SUPPORT POLES, METAL FRAME, (3) FINIALS, (6) GLASS SHADES, (6) METAL RINGS, (6) SOCKET RINGS AND WRENCH. TO PROTECT THE FINISH, PLACE ALL PARTS ON A SOFT SURFACE.

MOUNTING HARDWARE PACKAGE:
SCREW COLLAR LOOP, SCREW COLLAR NUT, NUT, NIPPLE, (2) 8-32 X 1-1/4" SCREWS, CROSSBAR, GREEN GROUND SCREW AND (3) WIRE CONNECTORS.

FIXTURE ASSEMBLY

1. SECURE (3) SUPPORT POLES TO METAL FRAME WITH (3) FINIALS.

2. SCREW CHAIN LOOP TO TOP OF LOWER CANOPY.

3. DETERMINE THE LENGTH OF CHAIN REQUIRED TO HANG THE FIXTURE AT THE DESIRED HEIGHT. USING PLIERS, OPEN ONE END LINK OF CHAIN AND ATTACH TO THE CHAIN LOOP ON TOP OF THE FIXTURE. REMOVE OR ADD CHAIN AS DESIRED AT THIS TIME. LACE FIXTURE WIRE AND GROUND WIRE UP THROUGH EVERY OTHER LINK OF CHAIN.

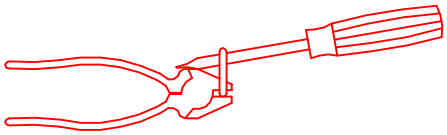

TO SPREAD A LINK OF CHAIN

USE A PAIR OF PLIERS AND A SCREWDRIVER AS SHOWN ABOVE, BEING CAREFUL TO WRAP THE JAWS OF THE PLIERS WITH CLOTH TO PROTECT THE FINISH OF THE CHAIN.

STOP COMPLETE INSTALLATION INSTRUCTIONS ON NEXT PAGE BEFORE CONTINUING TO FINAL ASSEMBLY.

FINAL ASSEMBLY

1. PLACE A GLASS SHADE OVER EACH SOCKET, THEN SECURE WITH A METAL RING AND A SOCKET RING (WRENCH INCLUDED).

2. INSTALL A 100 WATT MAX. MEDIUM BASE TYPE "A" BULB (NOT INCLUDED) INTO EACH SOCKET.

3. RESTORE POWER, YOUR NEW FIXTURE IS NOW READY FOR USE.

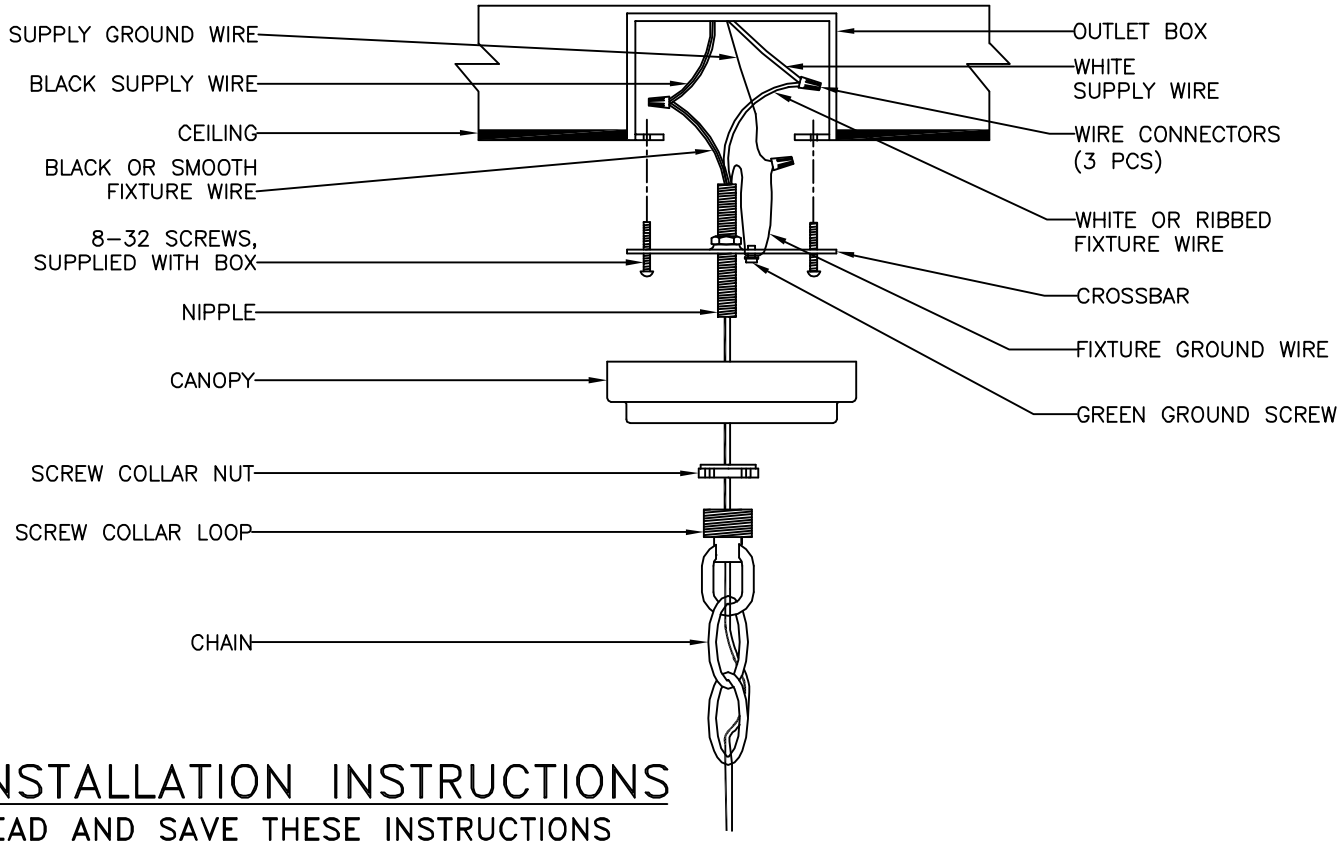

INSTALLATION INSTRUCTIONS

READ AND SAVE THESE INSTRUCTIONS

CAUTION

TO AVOID POSSIBLE ELECTRIC SHOCK, MAKE SURE THE ELECTRICITY IS SHUT OFF AT THE MAIN PANEL. IF YOU ARE REPLACING AN EXISTING FIXTURE, FIRSTLY, TURN THE FIXTURE OFF. NEXT, TURN THE WALL SWITCH OFF. FINALLY, GO TO THE MAIN FUSE OR BREAKER BOX IN YOUR HOME. TURN THE FUSE OR BREAKER TO THE OFF POSITION. SOME TYPES OF FUSES MUST BE UNSCREWED TO SHUT OFF THE POWER.

* ALL WIRING MUST BE DONE IN ACCORDANCE WITH NATIONAL AND LOCAL ELECTRIC CODES. IF YOU ARE NOT FAMILIAR WITH WIRING, YOU SHOULD USE A QUALIFIED ELECTRICIAN.

** THIS FIXTURE IS INTENDED TO BE MOUNTED TO A UL LISTED OUTLET BOX CAPABLE OF SUPPORTING THE FIXTURE.

1. ATTACH THE CROSS BAR TO THE CEILING OUTLET BOX USING THE TWO SCREWS PROVIDED WITH THE OUTLET BOX. (NOTE: IF THE SCREWS WITH THE OUTLET BOX ARE TOO SHORT, USE THE (2) 8–32 x 1–1/4" SCREWS PROVIDED IN THE MOUNTING HARDWARE PACKAGE). NEXT, SCREW THE SCREW COLLAR LOOP ONTO THE NIPPLE AND THEN SCREW THE NIPPLE INTO THE CROSS BAR.

2. SLIDE THE SCREW COLLAR NUT AND THEN THE CANOPY ONTO THE END OF THE CHAIN. THEN FASTEN THE END LINK OF CHAIN TO THE SCREW COLLAR LOOP.

3. INSERT THE FIXTURE WIRE AND THE GROUND WIRE UP THROUGH THE NIPPLE. CONNECT THE WHITE OR RIBBED FIXTURE WIRE TO THE WHITE SUPPLY WIRE IN THE OUTLET BOX USING THE TWIST–ON WIRE CONNECTORS PROVIDED. CONNECT THE BLACK OR SMOOTH FIXTURE WIRE TO THE BLACK SUPPLY WIRE IN THE SAME MANNER. INSTALL THE FIXTURE GROUND WIRE UNDER THE GREEN GROUND SCREW ON THE CROSSBAR THEN CONNECT THE FIXTURE GROUND WIRE TO THE SUPPLY GROUND WIRE IN THE OUTLET BOX USING THE TWIST–ON WIRE CONNECTOR PROVIDED.

4. TUCK THE WIRES CAREFULLY INSIDE THE OUTLET BOX. SPREAD THE ELECTRICAL SPLICES SO THAT THE BLACK WIRES ARE ON ONE SIDE OF THE OUTLET BOX AND THE WHITE WIRES ARE ON THE OTHER SIDE. NEXT RAISE THE CANOPY TO THE CEILING AND SECURE IN PLACE BY SCREWING THE SCREW COLLAR NUT ONTO THE SCREW COLLAR LOOP.

5. SEE PREVIOUS PAGE FOR FINAL ASSEMBLY INSTRUCTIONS.