ASSEMBLY INSTRUCTIONS

Parts List:

NO	DESCRIPTION	QTY
1	Wood Bar	1
2	Frame	2
3	Iron Bar	2
4	Plate	1
5	Pipe	1
6	Handle	1
7	Screw	2
8	Nut	4
9	Small Screw	1

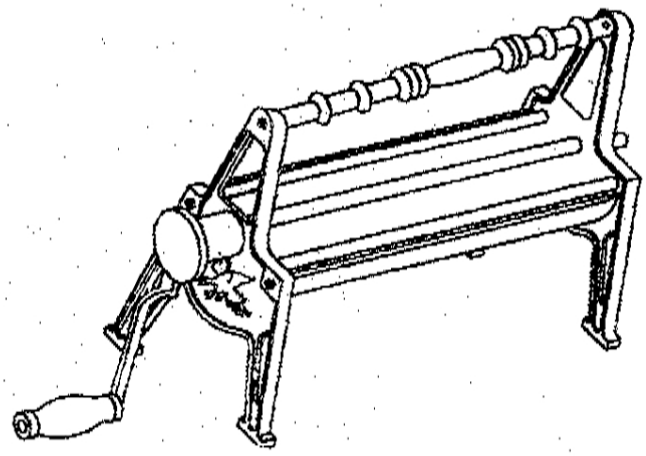

INSTRUCTIONS:

1. Put iron bar (3) through two frames (2). Insert plate (4) onto each frame side track, then tighten nuts (8).
2. Use two screws (7) to attach wood bar (1) to each end of frame (2).
3. Insert the hole end of pipe (5) onto the handle (6) ,tighten with small screw (9).
4. Insert pipe (5) with handle (6) through large hole of frame (2) and go through to small hole of frame (2).

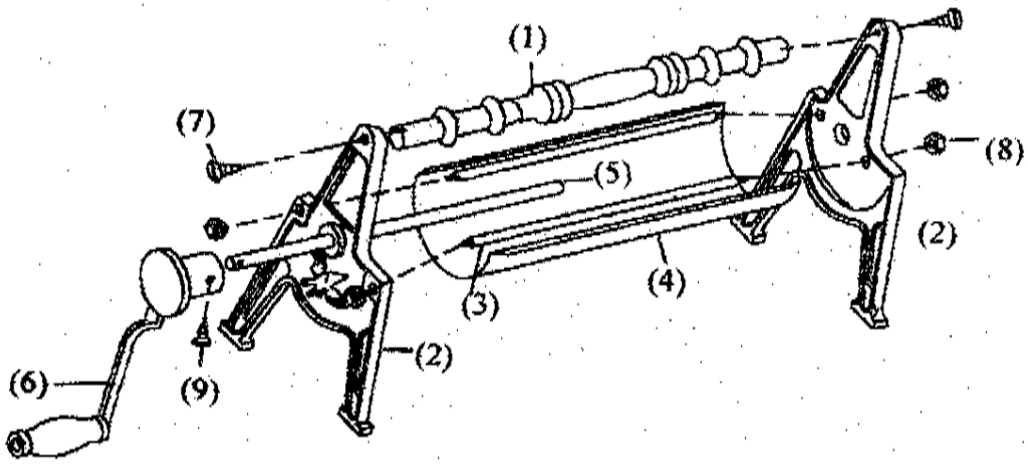

Paper Log Rolling Instructions

1. Wet each end of one or two newspaper sheets with water.
2. Insert one end of your newspaper sheet into #5 pipe .
3. Roll your newspaper sheet thru with #6 handle.
4. Attach your next sheet of newspaper onto your first sheet before completely rolling your first sheet thru.
5. Continue steps 1 thru 4 until you have created your own custom size paper log.
6. Tie each log with either string or a wire trash bag tie.(Not included)

MADE IN CHINA