T120 Heritage / Earl

American Bath Factory
DECADES OF DEPENDABILITY

SPECIFICATION SHEET

Double Ended Specialty Bathtub

Overall Dimensions: 72″ L x 42″W x 26½″H
Capacity: 72 Gallons
Weight: Without Champagne: Dry wt. = 240 lbs. Full wt. = 840 lbs.
With Champagne: Dry wt. = 270 lbs. Full wt. = 870 lbs.

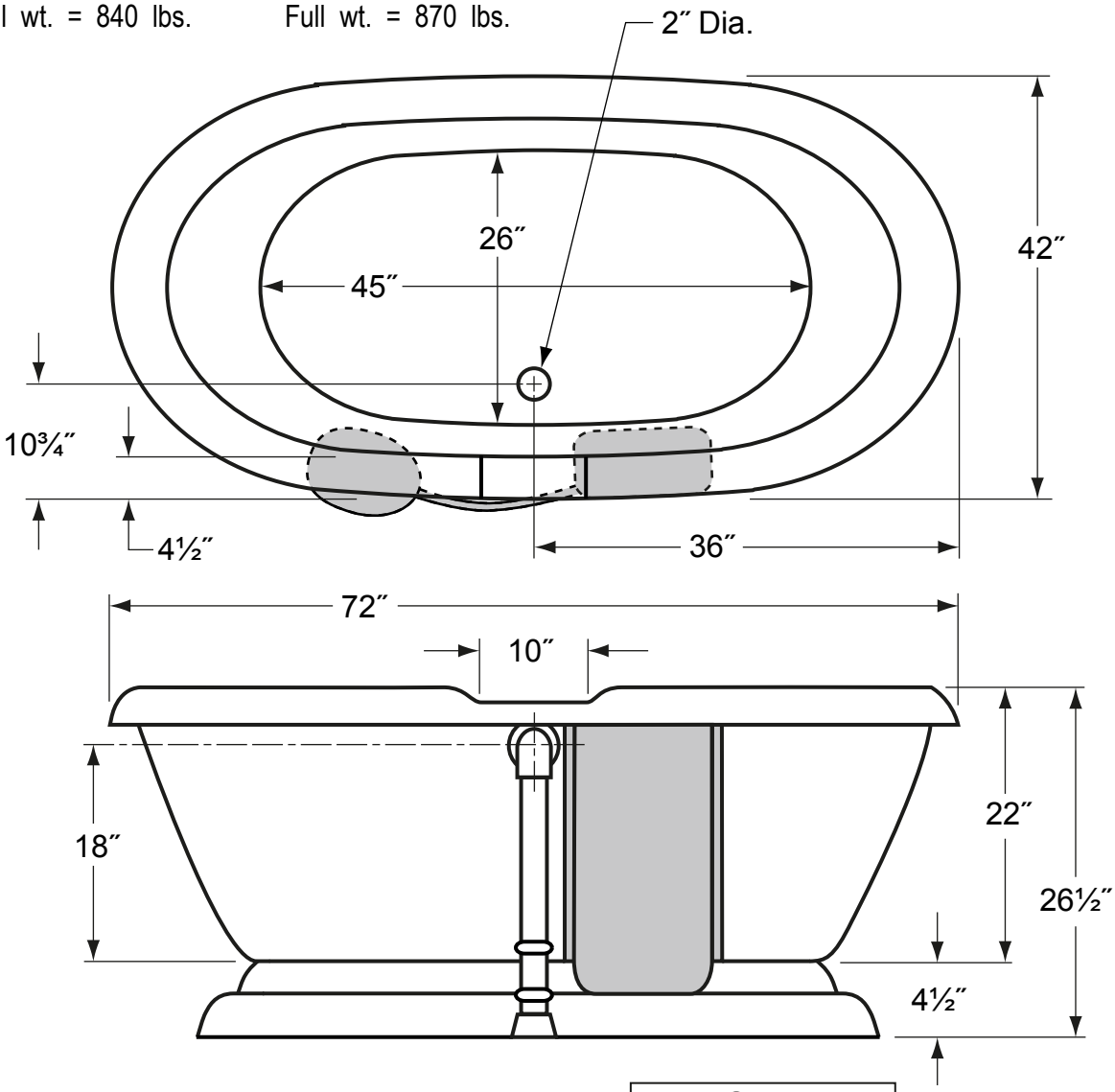

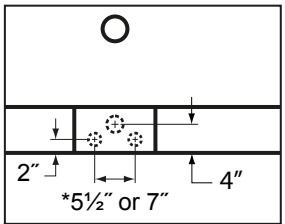

Floor mount locations for double ended bathtub drain and supply lines

* 5½″ floor spacing needed when using straight supply lines and 3 ⅜″ deck mount holes

- *Shaded areas only included on models with Champagne Massage®*
- *Champagne Massage® blower unit (12″ L x 7″W x 10″H) is connected with a three foot adjustable hose and fits within the overall dimensions of the bathtub.*
- *The illustration above is shown with the standard waste & overflow. See individual specification sheets for waste & overflow dimensions*
- *Dimensions shown have a tolerance of ± ½″ Dimensions shown not to scale.*
- *See Clawfoot Guide for detailed installation instructions.*

ENG_T120_spec_sheet_Rev_B
10/12