4DC ARLINGTON ENTERTAINMENT

MODEL: 89854

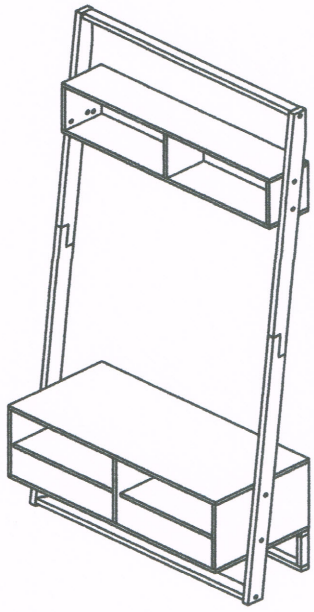

NEED ASSISTANCE ?

Call 4D Concepts directly for parts or assembly assistance.
Individual Store do not stock parts.
Call our Toll-free number 5 days a week except holidays:
Monday through Friday 8.00am to 5.00pm
Pacific Standard Time

1-888-310-4DCO or 1-888-310 4326

IMPORTANT: Before calling please have the model number and the packing code number ready for our customer service representatives. You will find the model number printed on the carton label and the packing code printed in black ink on the side of the carton.

Model 89854 Packing Code

It is important that you retain the model number and the packing code along with the original receipt of purchase for your future reference.

Made in Malaysia

www.4dconceptsusa.com

ASSEMBLY INSTRUCTION

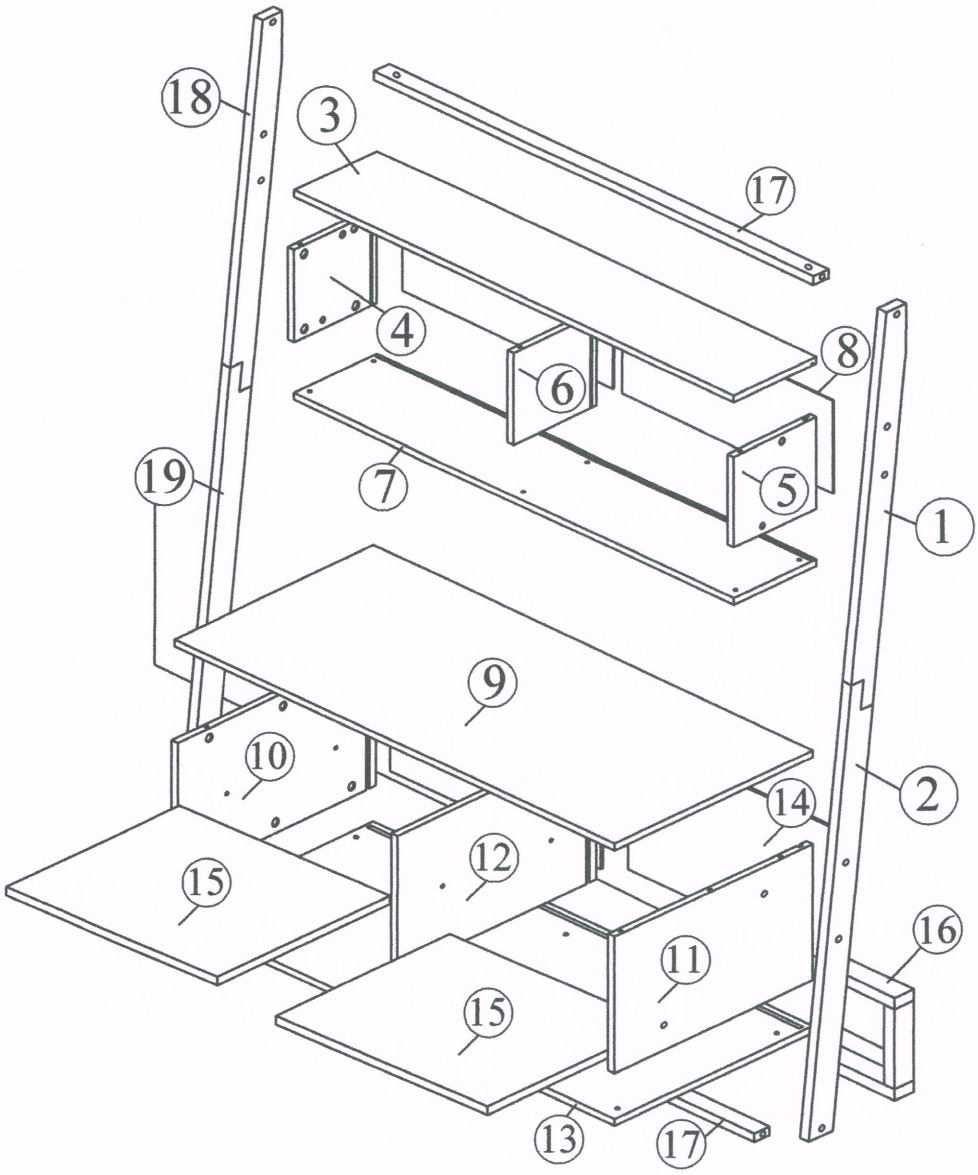

A x 12	B x 8	C x 8	D x 4	E x 8
	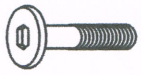	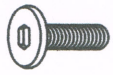		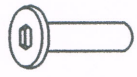
F x 24	G x 24	H x 6	I x 2	J x 12
			m6 x 35	
K x 8	L x 24	M x 1		

ASSEMBLY INSTRUCTION

4DC ARLINGTON ENTERTAINMENT

MODEL: 89854

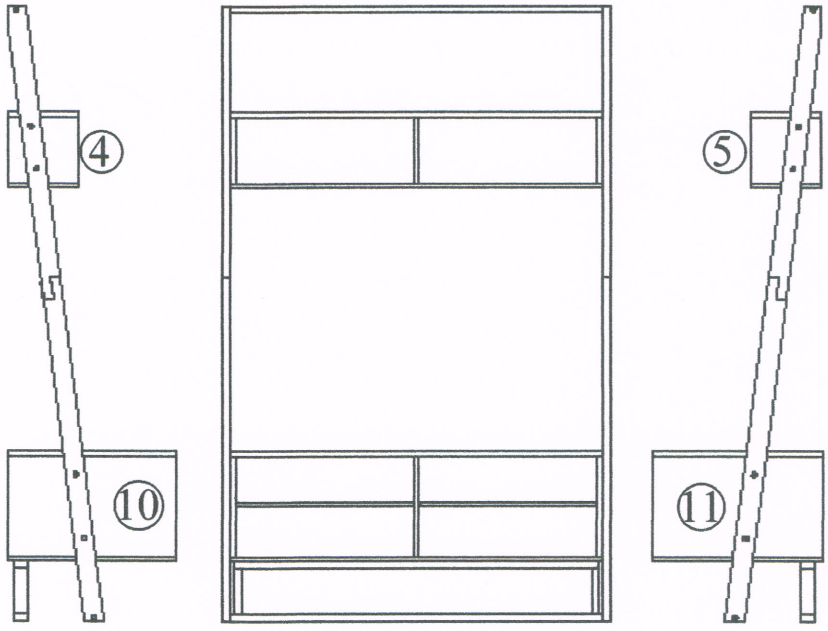

ATTENTION!
CAUTION WHEN ASSEMBLING UNIT AS PARTS LOOK SIMILAR

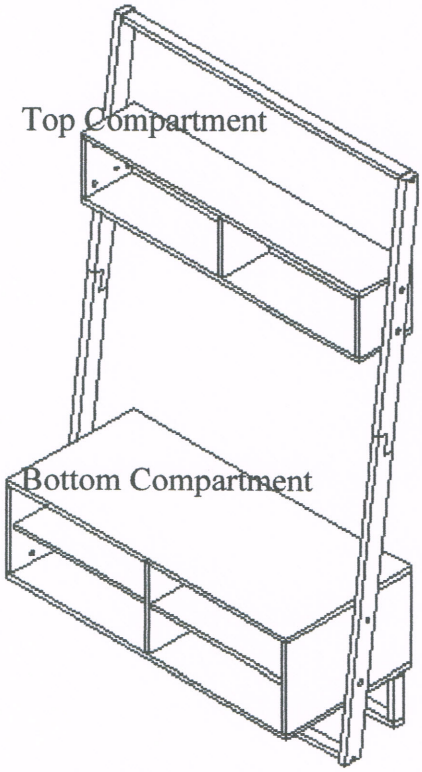

ATTENTION!

1) To assemble Top Compartment you need Part #3,4,5,6,7 and 8.
Refer to Step 1,2 and 3

2) To assemble Bottom Compartment you need Part #9,10,11,12,13,14 and 16.
Refer to Step 4,5,6,7 and 8

Step 1

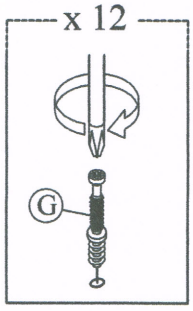

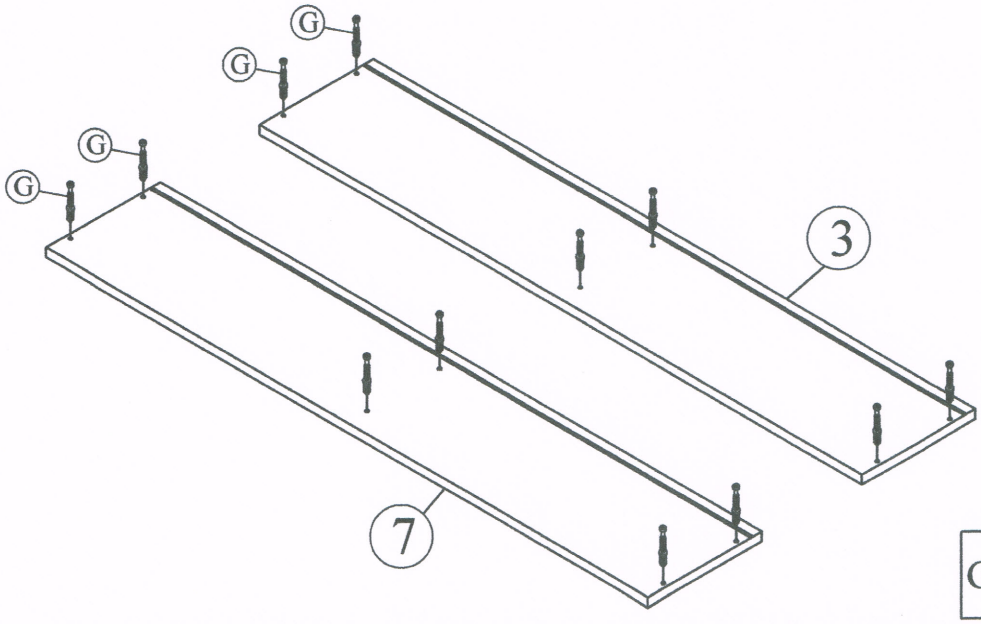

G Minifix Bolt x12

Step 2

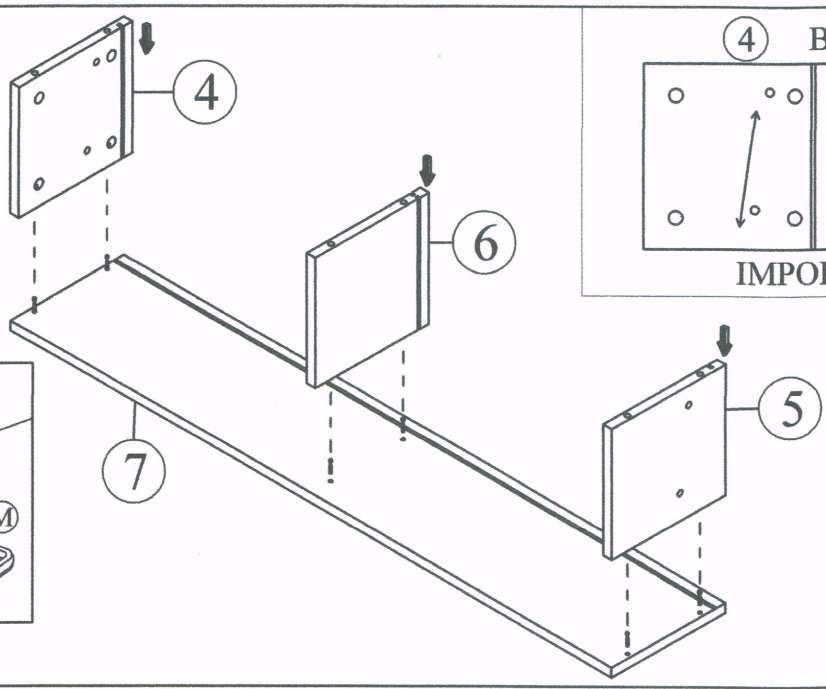

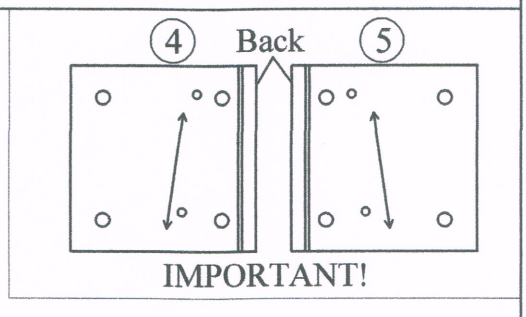

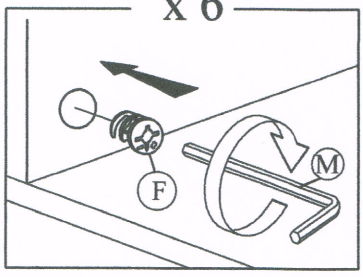

F Minifix Cam x6

Step 3

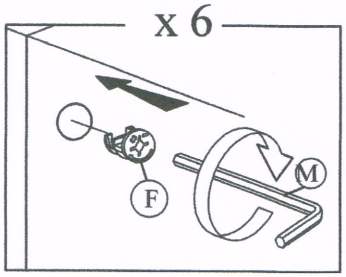

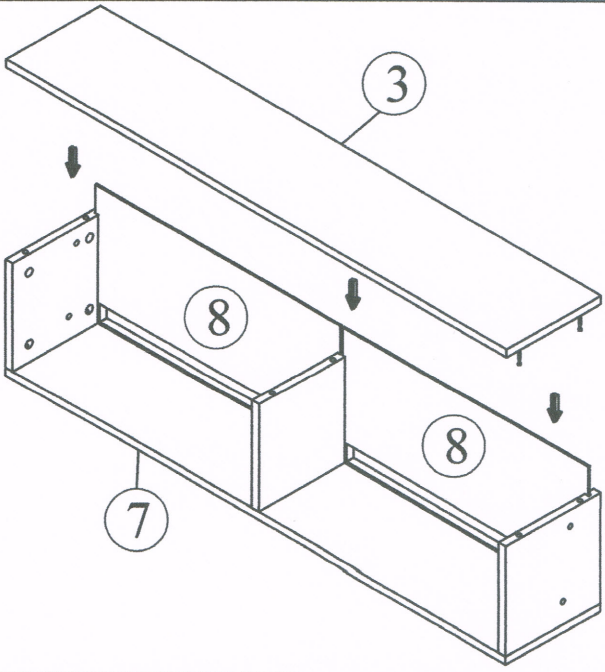

F Minifix Cam x6

Step 4

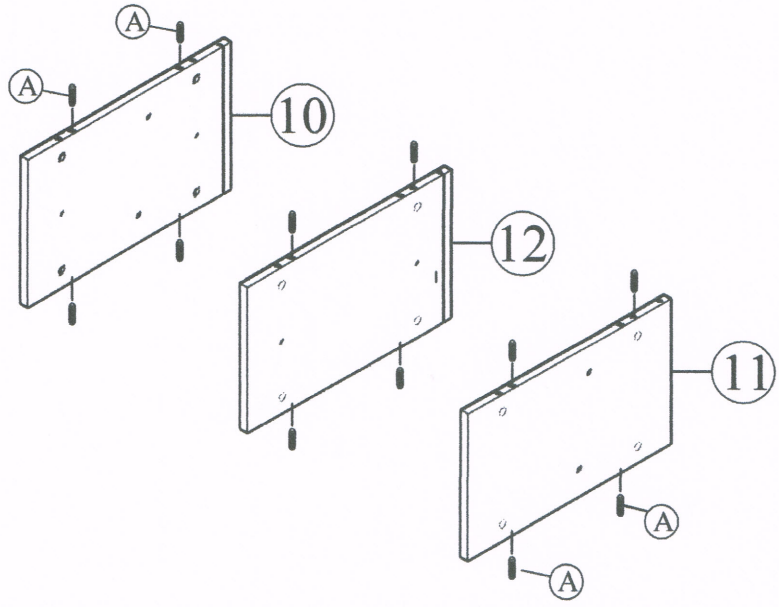

A Wood Dowel x12

Step 5

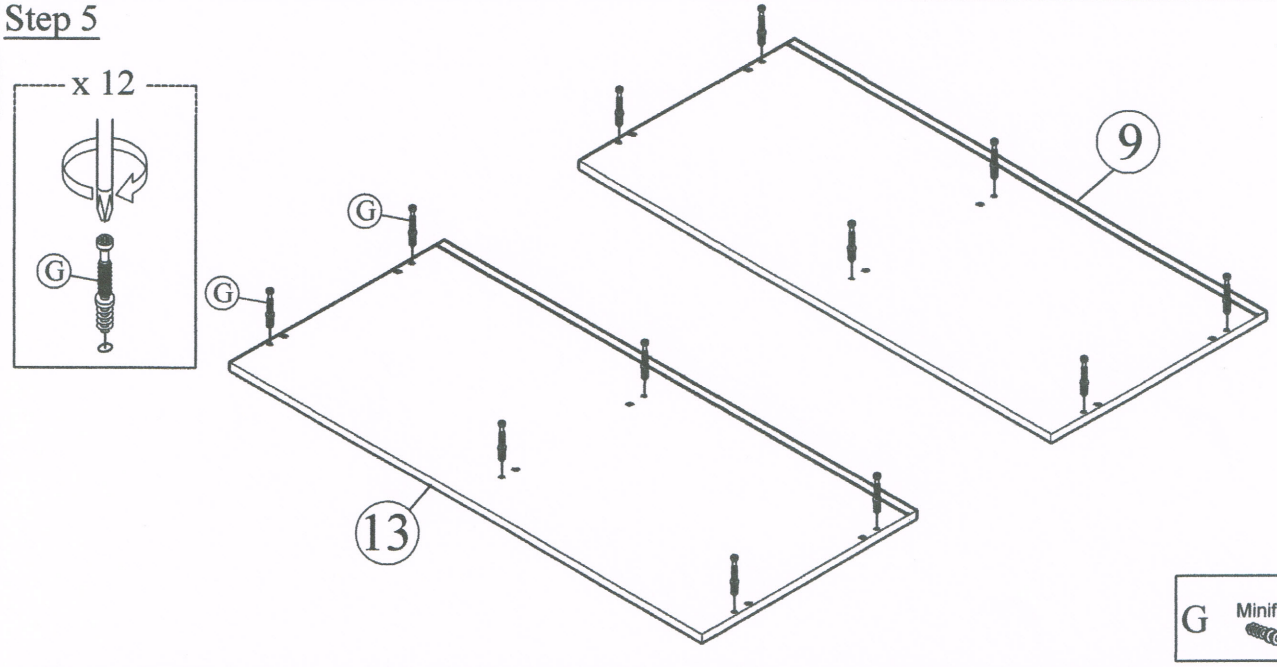

G Minifix Bolt x12

Step 6

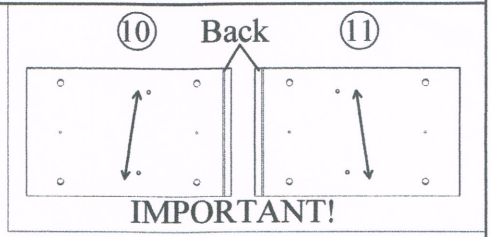

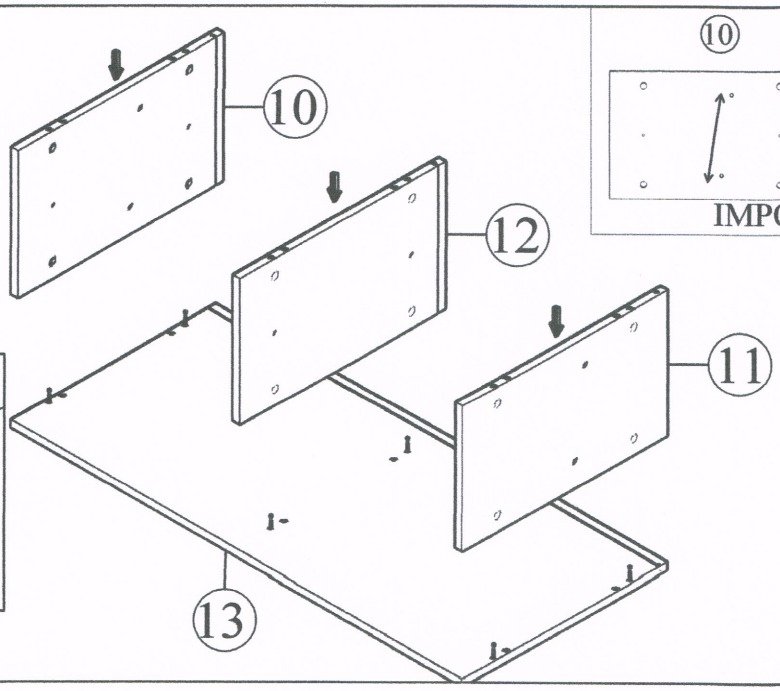

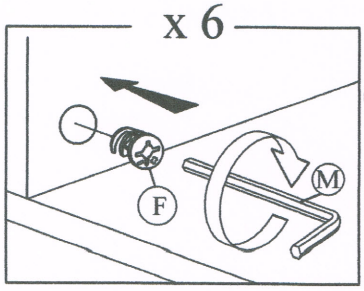

F Minifix Cam x6

Step 7

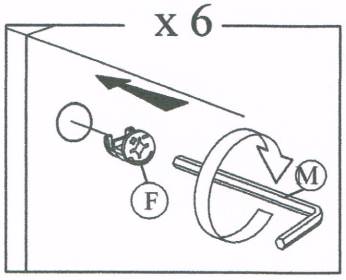

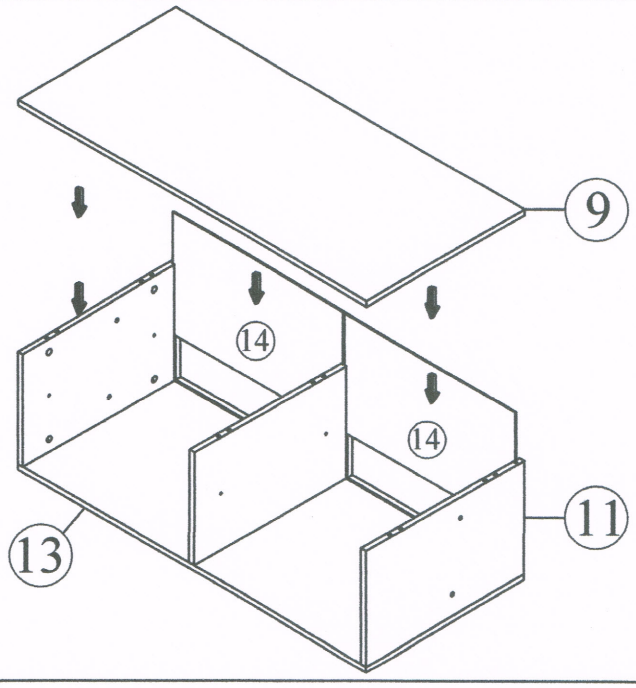

F Minifix Cam x6

Step 8

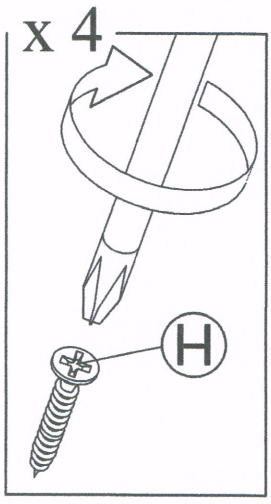

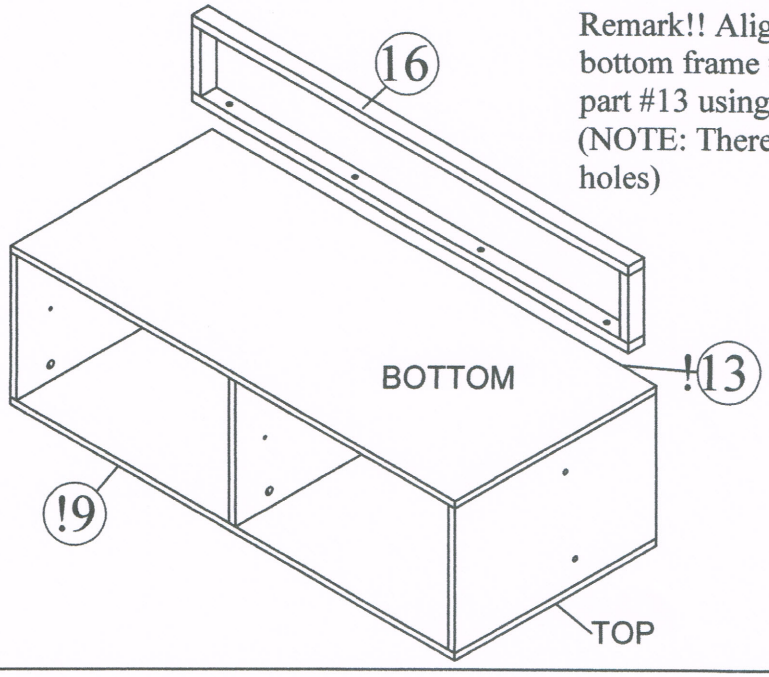

Remark!! Align and assemble the bottom frame #16 to the bottom of part #13 using wood screw H. (NOTE: There are NO Pre-drilled holes)

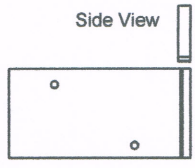

H Wood Screw x4

Step 9

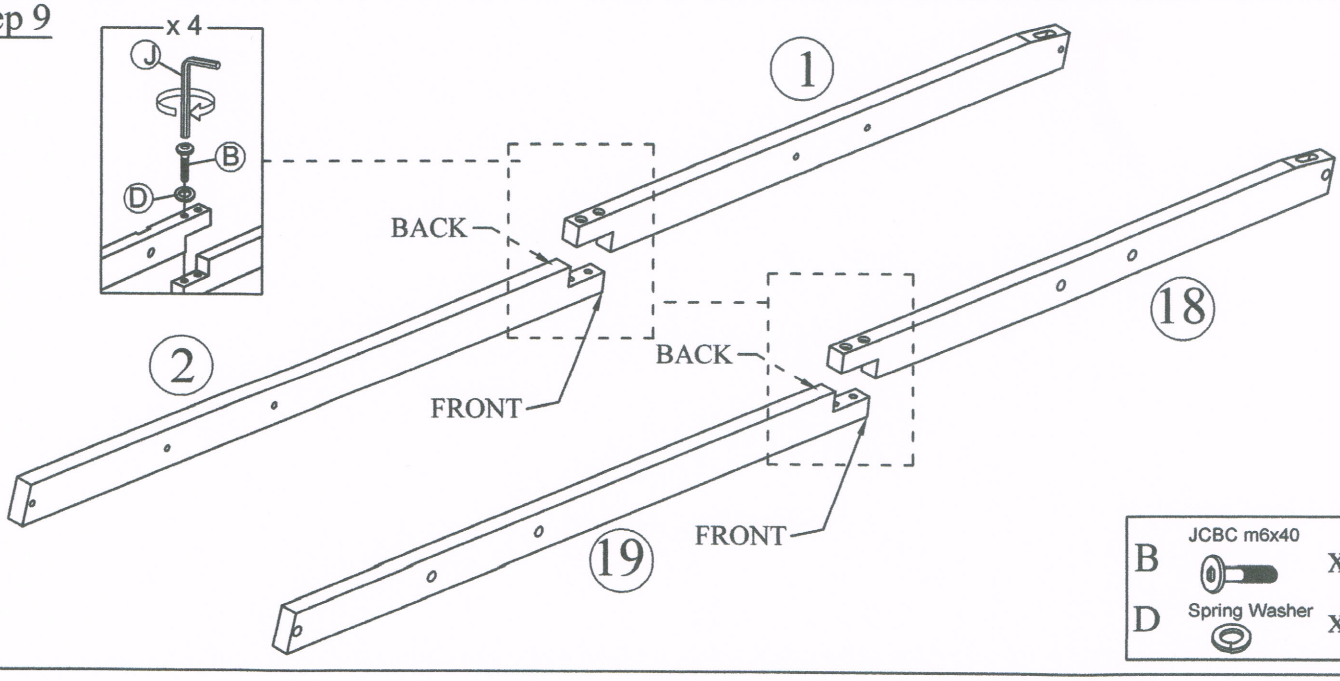

B JCBC m6x40 x4

D Spring Washer x4

Step 10

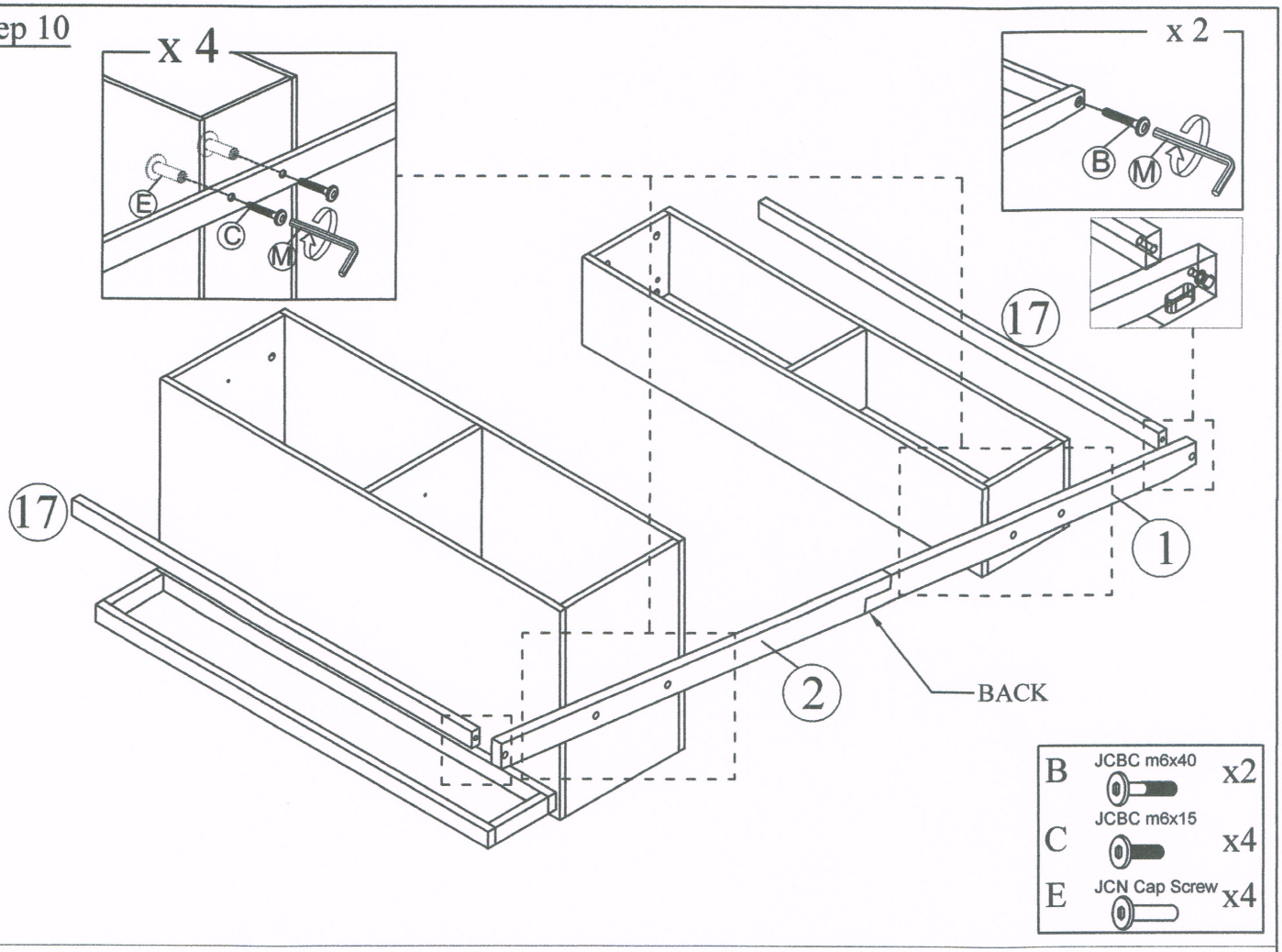

B	JCBC m6x40	x2
C	JCBC m6x15	x4
E	JCN Cap Screw	x4

Step 11

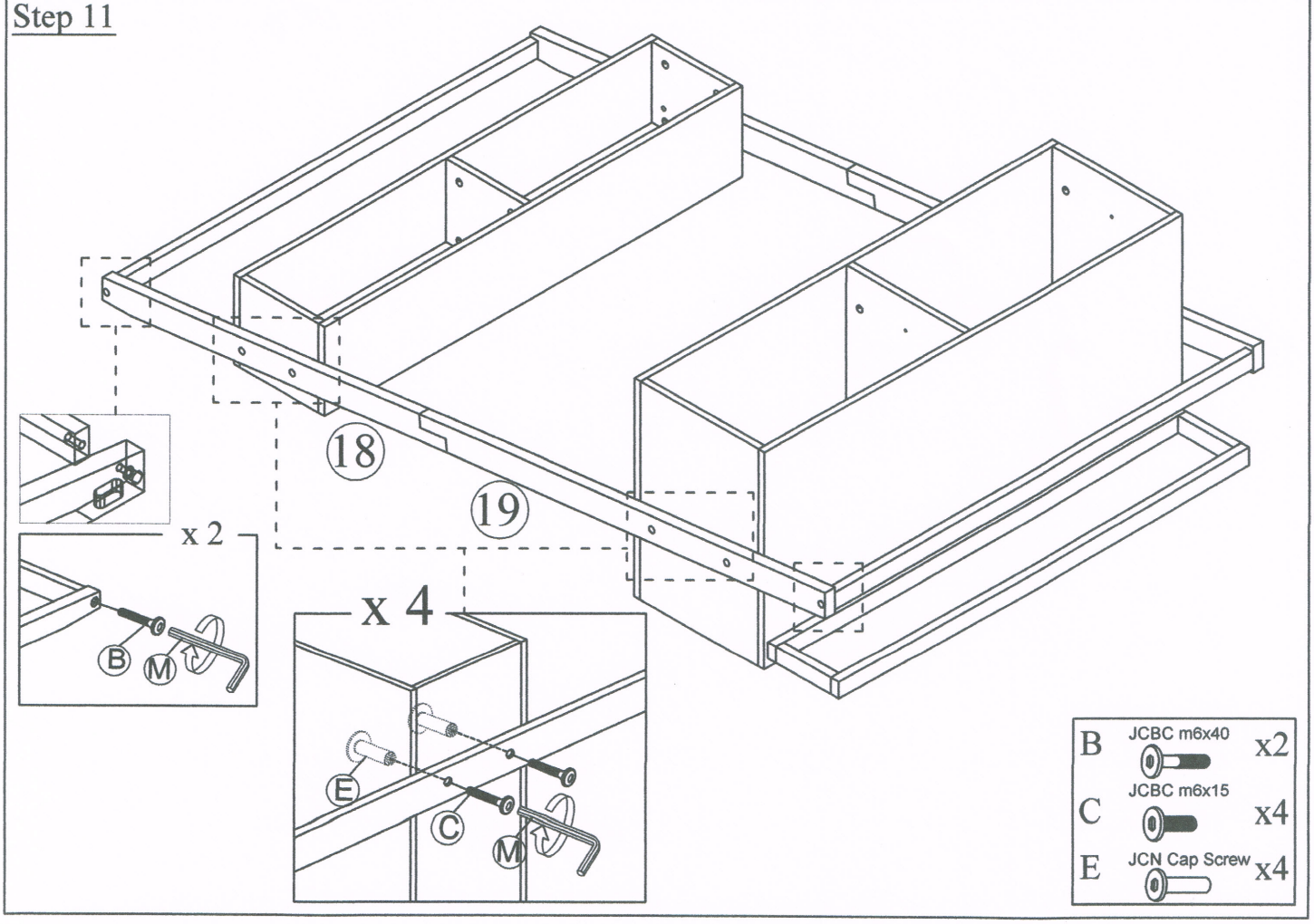

B	JCBC m6x40	x2
C	JCBC m6x15	x4
E	JCN Cap Screw	x4

Step 12

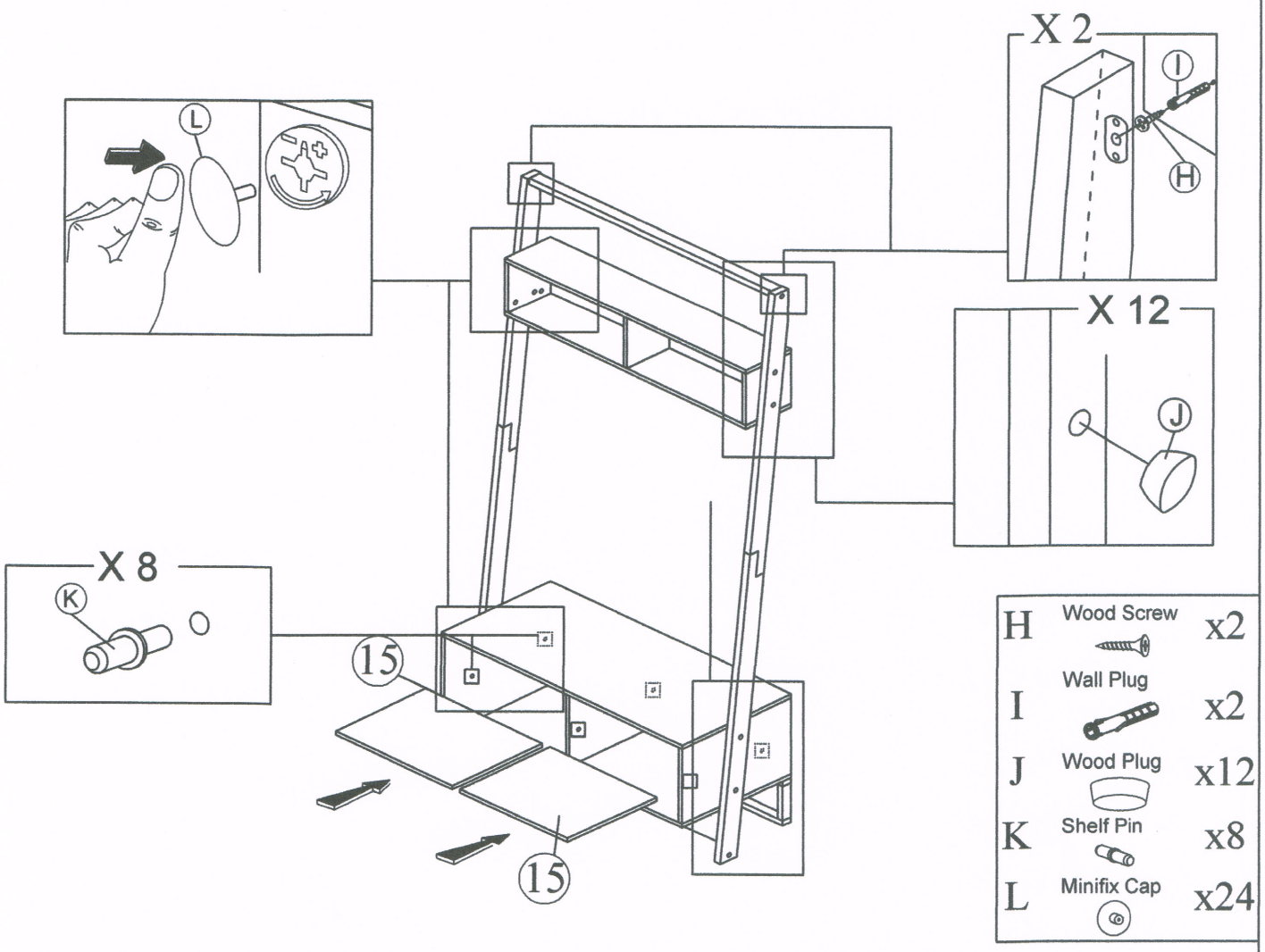

Safety Mounting Instruction:

For safety and stability, the mounting hardware needs to be installed.
For safe mounting, it is essential to use wall anchors appropriate to your wall type (i.e.plaster, drywall, concrete, etc.). Mount to wood studs whenever possible.

NOTE: If you are unsure about your wall type or what mounting method you should use, consult a qualified professional or your local hardware store.