ASSEMBLY INSTRUCTION

ITEM NO:#3422-30/#3422-30G COCKTAIL table

Thanks for buying our products.
please study the diagram before assembling.
(Note:DO NOT FASTEN SCREWS UPON COMPLETION OF ASSEMBLY)

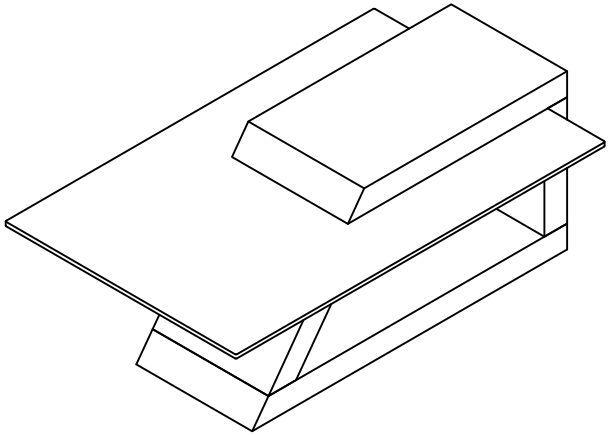

PARTS LIST

NO.	DESCRIPTION		Q'TY
A	Glass Top		1
B	Top Panel		1
C	Back Panel		1
D	Front Panel		1

HARDWARE LIST

NO.	DESCRIPTION			Q'TY
E	FLAT WASHER	5/16"*19MM		8
F	SPRING WASHER	5/16"		8
G	BOLT	5/16"*2"		4
H	BOLT	5/16"*3-1/2"		4
I	HEX-HEAD WRENCH	5mm		1

STEP 1

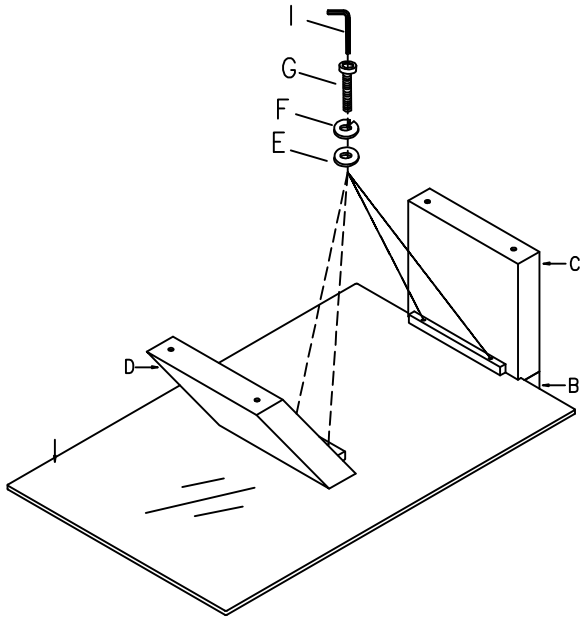
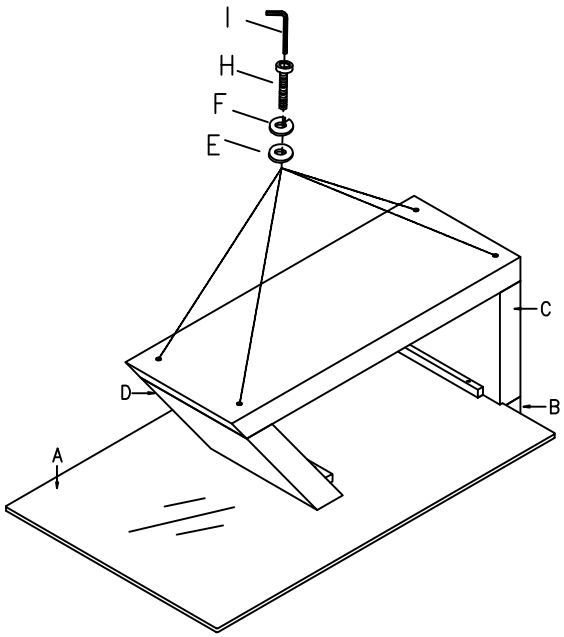
STEP 2