ASSEMBLY INSTRUCTIONS

ITEM NO. 3303-01 ROUND CKTL TABLE

1	2	3	4
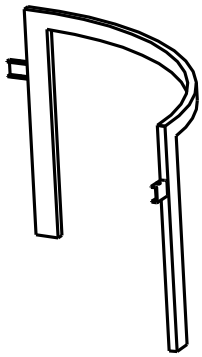	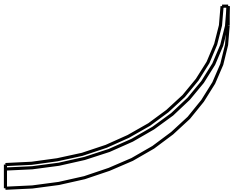	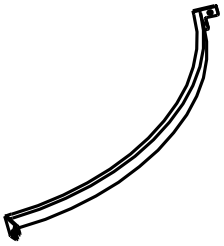	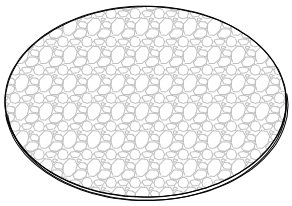
SIDE PANEL 2PCS	**BOTTOM STRETCHER 2PCS**	**TOP STRETCHER 2PCS**	**GLASS TOP 1PC**

HARDWARE LIST

A	B	C	D	E
	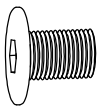	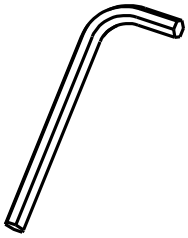	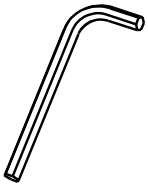	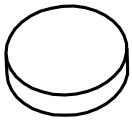
3/16 " x 10mm 4 PCS	**1/4 " x 1/2 " 8 PCS**	**1PCS**	**1 PC**	**GLASS TIP 4 PCS**

*** **Do not tighten screws & bolts until the entire unit is completely assembled.**

Step 1 :

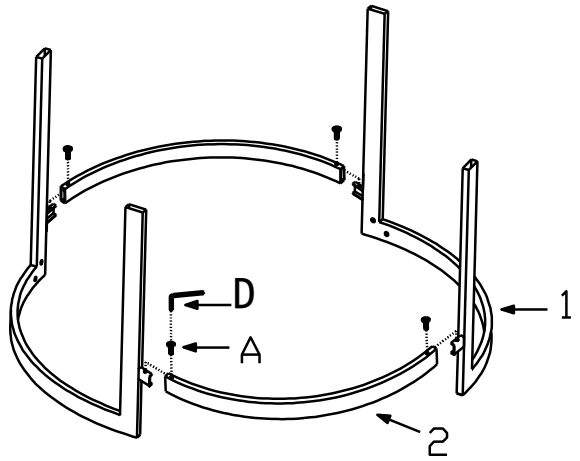

Step 2:

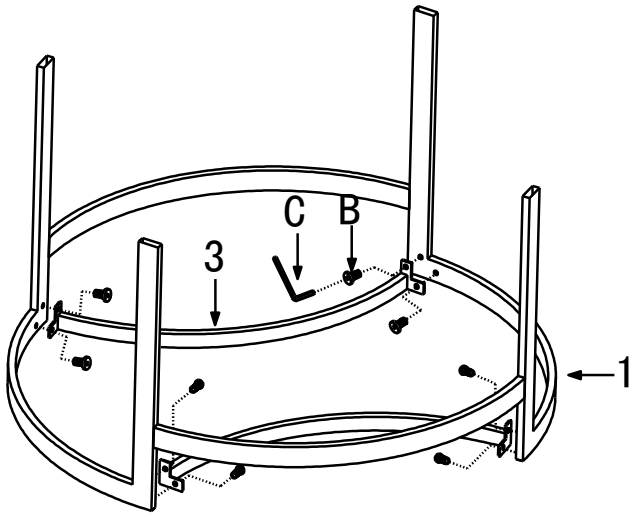
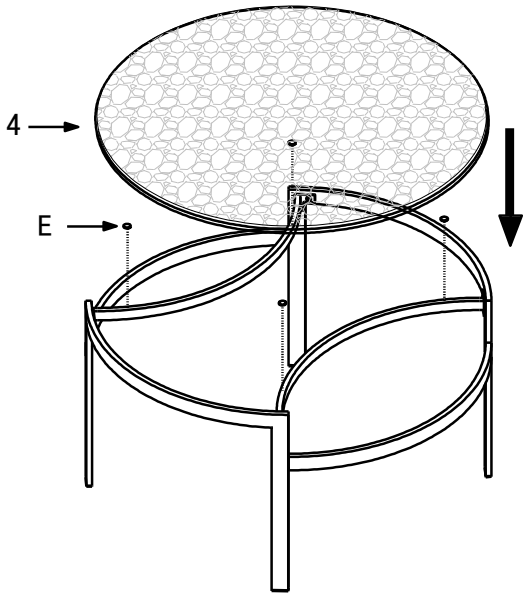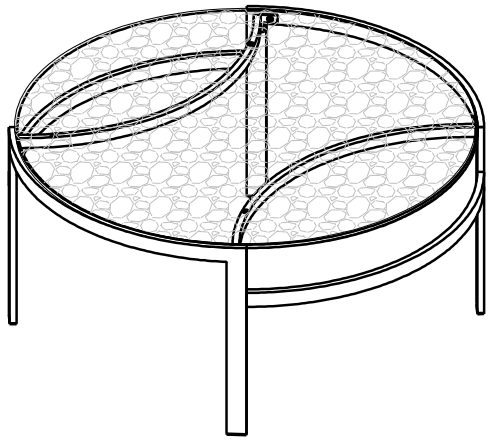
Step 3 :