**MODEL: 30" VIRGINA CROSS BACK STOOL (11730)** BLK-WHT 4-20-2011

**ASSEMBLY INSTRUCTION**

Dear Customer,

Thank you for purchasing our furniture products.

Read instruction carefully. See hardware and furniture part list for guidance. Be sure all part is complete before assembly. Place all wooden furniture parts on a clean and flat surface to prevent from being scratched. Follow the figure to start assembling.

## CAUTIONS!!!

**1. DO NOT FULLY TIGHTEN THE NUT OR BOLTS UNTIL ALL THE NUTS OR BOLTS IS READY ASSEMBLED.**

**2. DO NOT OVER TIGHTEN THE NUT OR BOLTS TO AVOID CAUSING DAMAGES TO THE THREAD.**

| NO | PARTS LIST | QTY |
|---|---|---|
| A | CHAIR BACK | 1 pc |
| B | SIDE RAIL (LF) | 1pc |
| C | SIDE RAIL (RF) | 1pc |
| D | STRETCHER (LF) | 1 pc |
| E | STRETCHER (RF) | 1 pc |
| F | FRONT LEG | 1 pc |
| G | WOODEN SEAT | 1 pc |

| NO | HARDWARE LIST | | QTY |
|---|---|---|---|
| 1 | | CSK SCREW M4 x 32mm | 3 pcs |
| 2 | | CSK SCREW M4 x 38mm | 4 pcs |
| 3 | | JCBC BOLT M6 x 50mm | 6 pcs |
| 4 | | SPRING WASHER | 6 pcs |
| 5 | | FLAT WASHER | 6 pcs |
| 6 | | ALLEN KEY | 1 pc |

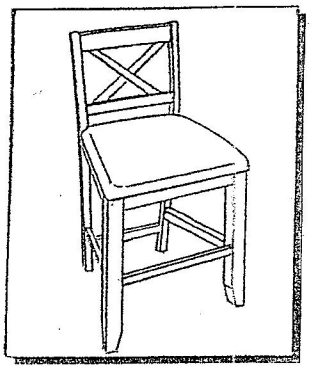

**NOTE: THE LIST QUANTITY SHOW ABOVE IS FOR 1 UNIT ASSEMBLY**

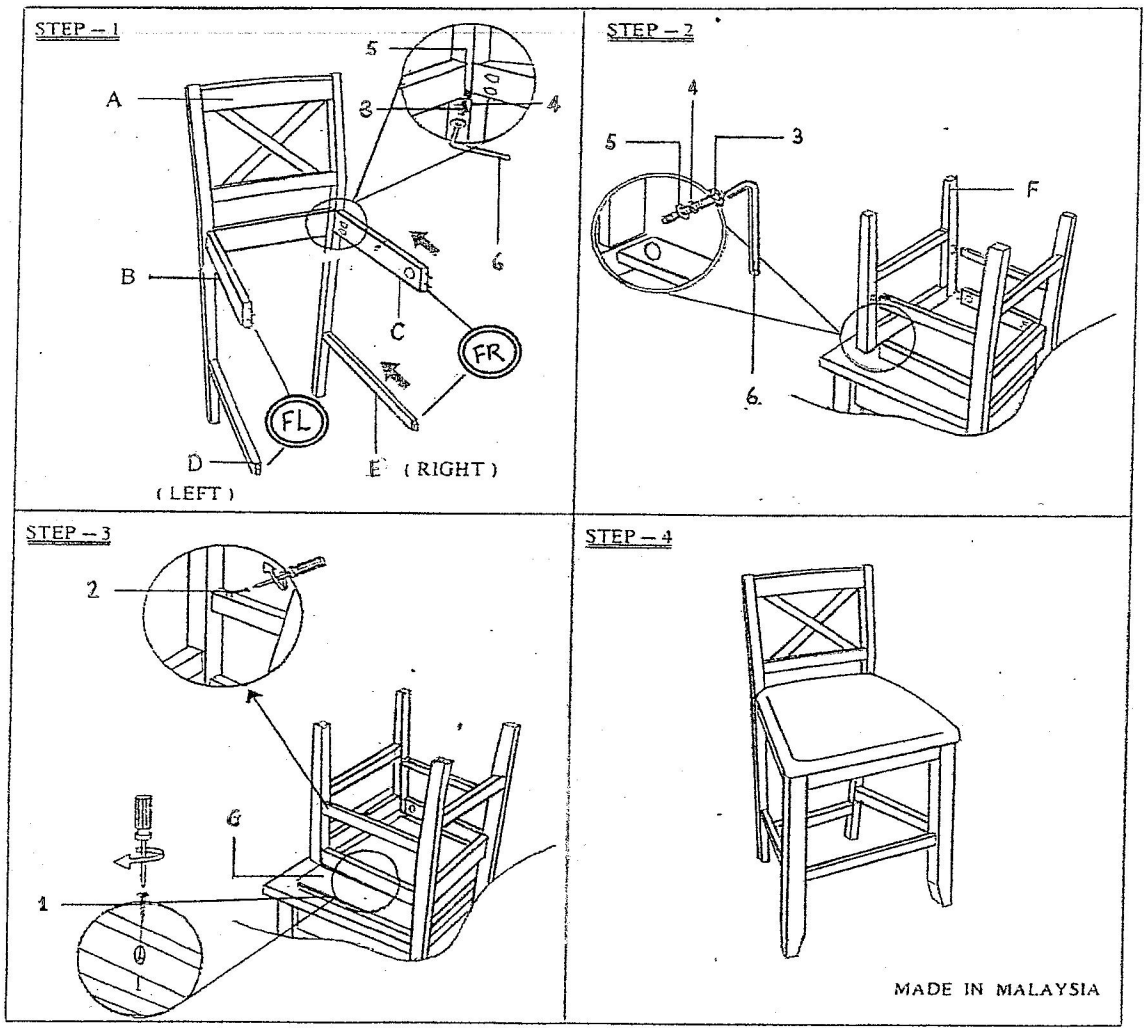

MODEL: 24" VIRGINA CROSS BACK STOOL (11724) BLK-WHT - 4. 20. 2011

# ASSEMBLY INSTRUCTION

Dear Customer,

Thank you for purchasing our furniture products.

Read instruction carefully. See hardware and furniture part list for guidance. Be sure all part is complete before assembly. Place all wooden furniture parts on a clean and flat surface to prevent from being scratched. Follow the figure to start assembling.

## CAUTIONS!!!

**1. DO NOT FULLY TIGHTEN THE NUT OR BOLTS UNTIL ALL THE NUTS OR BOLTS IS READY ASSEMBLED.**

**2. DO NOT OVER TIGHTEN THE NUT OR BOLTS TO AVOID CAUSING DAMAGES TO THE THREAD.**

| NO | PARTS LIST | QTY |
|---|---|---|
| A | CHAIR BACK | 1 pc |
| B | SIDE RAIL (LF) | 1pc |
| C | SIDE RAIL (RF) | 1pc |
| D | STRETCHER (LF) | 1 pc |
| E | STRETCHER (RF) | 1 pc |
| F | FRONT LEG | 1 pc |
| G | WOODEN SEAT | 1 pc |

| NO | HARDWARE LIST | | QTY |
|---|---|---|---|
| 1 | | CSK SCREW M4 x 32mm | 3 pcs |
| 2 | | CSK SCREW M4 x 38mm | 4 pcs |
| 3 | | JCBC BOLT M6 x 50mm | 6 pcs |
| 4 | | SPRING WASHER | 6 pcs |
| 5 | | FLAT WASHER | 6 pcs |
| 6 | | ALLEN KEY | 1 pc |

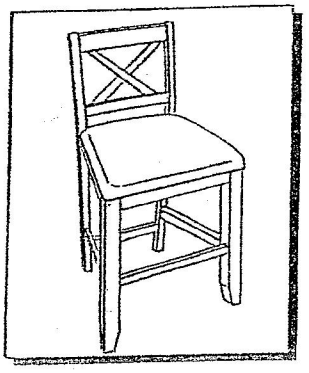

**NOTE: THE LIST QUANTITY SHOW ABOVE IS FOR 1 UNIT ASSEMBLY**

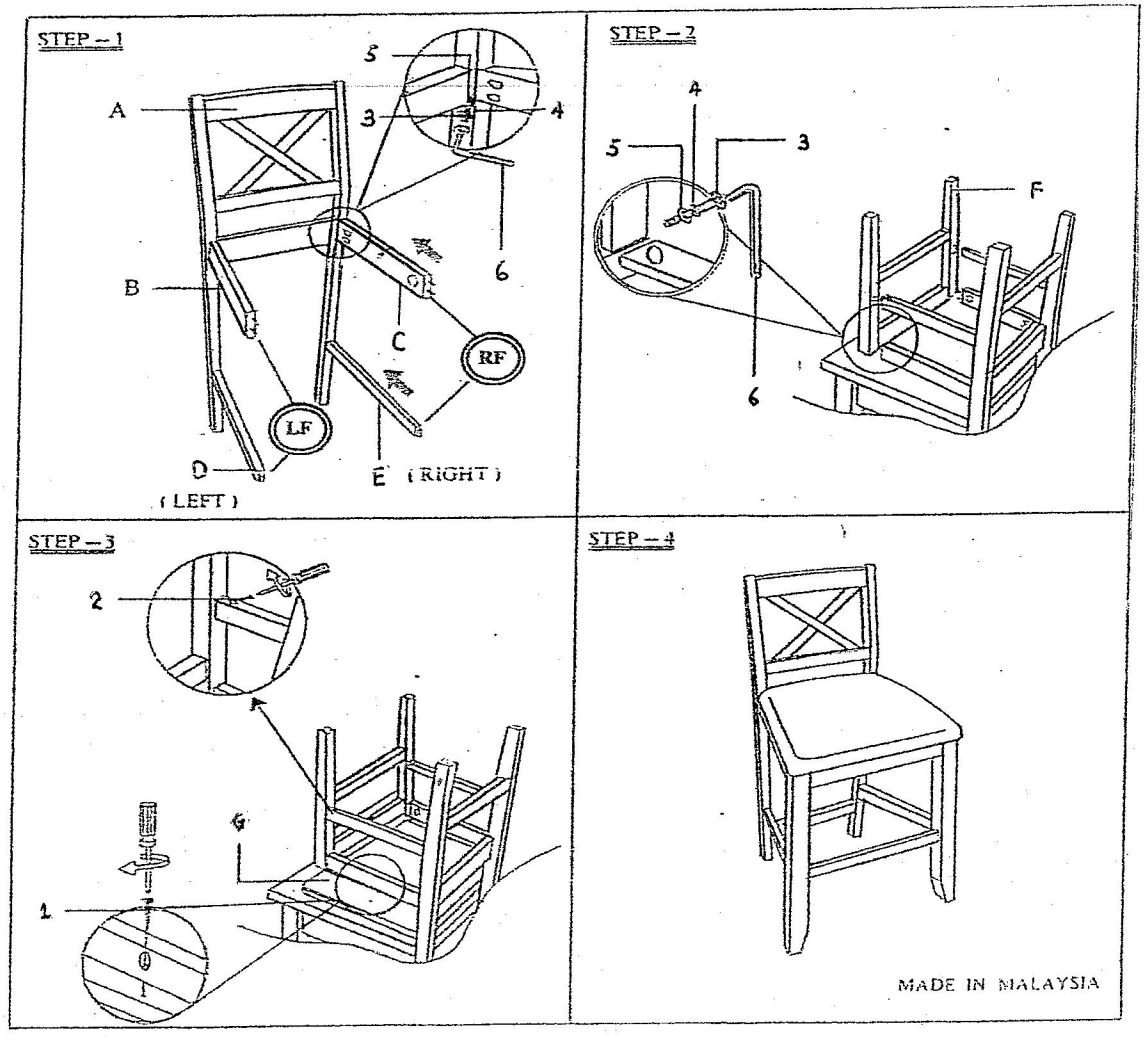

4-20-2011

**MODEL: VIRGINA CROSS BACK CHAIR (11718)** BLK-ASK-WHT
**ASSEMBLY INSTRUCTION**

Dear Customer,

Thank you for purchasing our furniture products.

Read instruction carefully. See hardware and furniture part list for guidance. Be sure all part is complete before assembly. Place all wooden furniture parts on a clean and flat surface to prevent from being scratched. Follow the figure to start assembling.

**CAUTIONS!!!**

**1. DO NOT FULLY TIGHTEN THE NUT OR BOLTS UNTIL ALL THE NUTS OR BOLTS IS READY ASSEMBLED.**

**2. DO NOT OVER TIGHTEN THE NUT OR BOLTS TO AVOID CAUSING DAMAGES TO THE THREAD.**

| NO | PARTS LIST | | QTY |
|---|---|---|---|
| 1 | CHAIR BACK | | 1 pc |
| 2 | FRONT LEG | | 1 pc |
| 3 | WOODEN SEAT | | 1 pc |
| 4 | SIDE RAIL (FL) | | 1 pcs |
| 5 | SIDE RAIL (FR) | | 1 pcs |
| 6 | SIDE LOWER RAIL (FL) | | 1 pc |
| 7 | SIDE LOWER RAIL (FR) | | 1 pc |

| NO | HARDWARE LIST | | QTY |
|---|---|---|---|
| A | | JCBC BOLT M6 x 50mm | 8 pcs |
| B | | SPRING WASHER | 8 pcs |
| C | | FLAT WASHER | 8 pcs |
| D | | CSK SCREW M4 x 38mm | 4 pcs |
| E | | CSK SCREW M4 x 32mm | 3 pcs |
| F | | ALLEN KEY | 1 pc |

**NOTE: THE LIST QUANTITY SHOW ABOVE IS FOR 1 UNIT ASSEMBLY**

Step 1

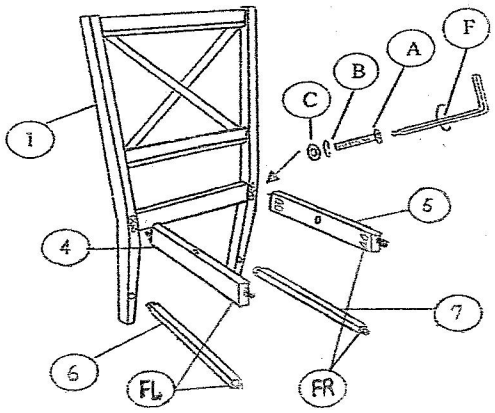


Step 2

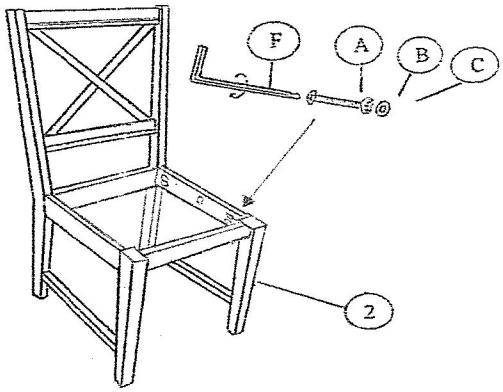


Step 3

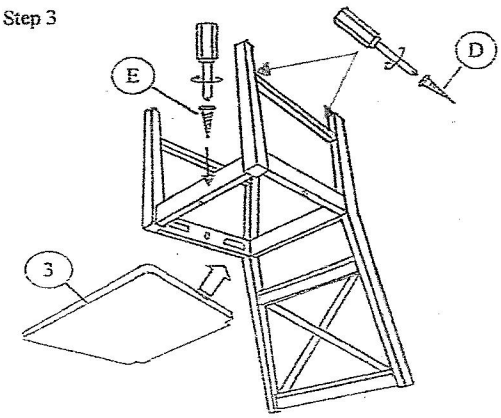


Completed Chair

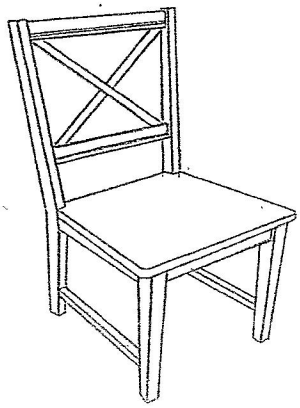

MADE IN MALAYSIA