Dynasty®
HARDWARE

PRODUCT SPECIFICATION DIAGRAM

MODEL NO. DYN-S11353-XX
ALL DIMENSIONS ARE NOMINAL

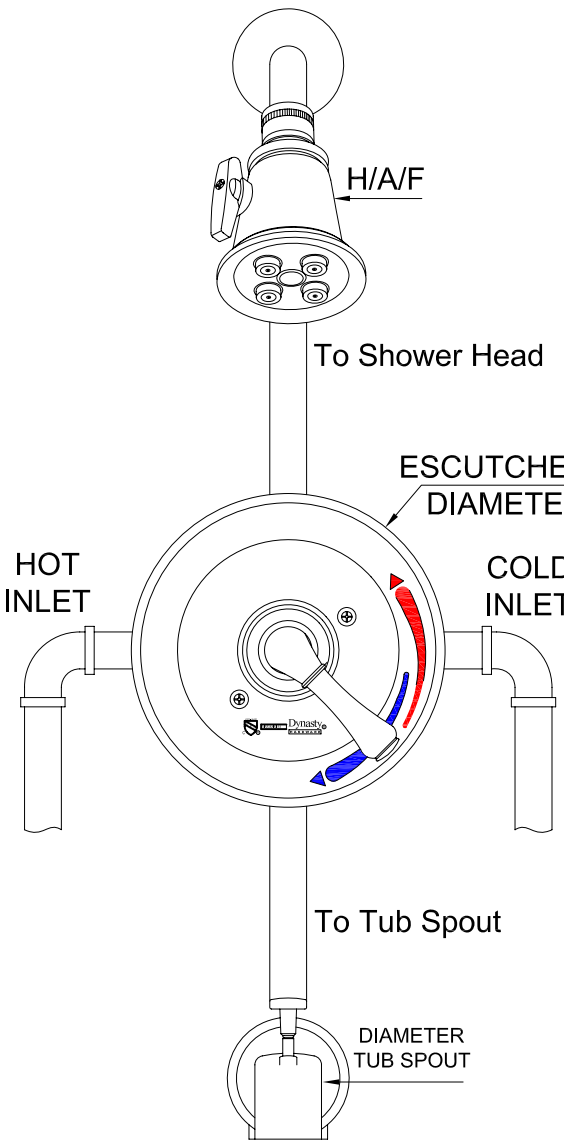

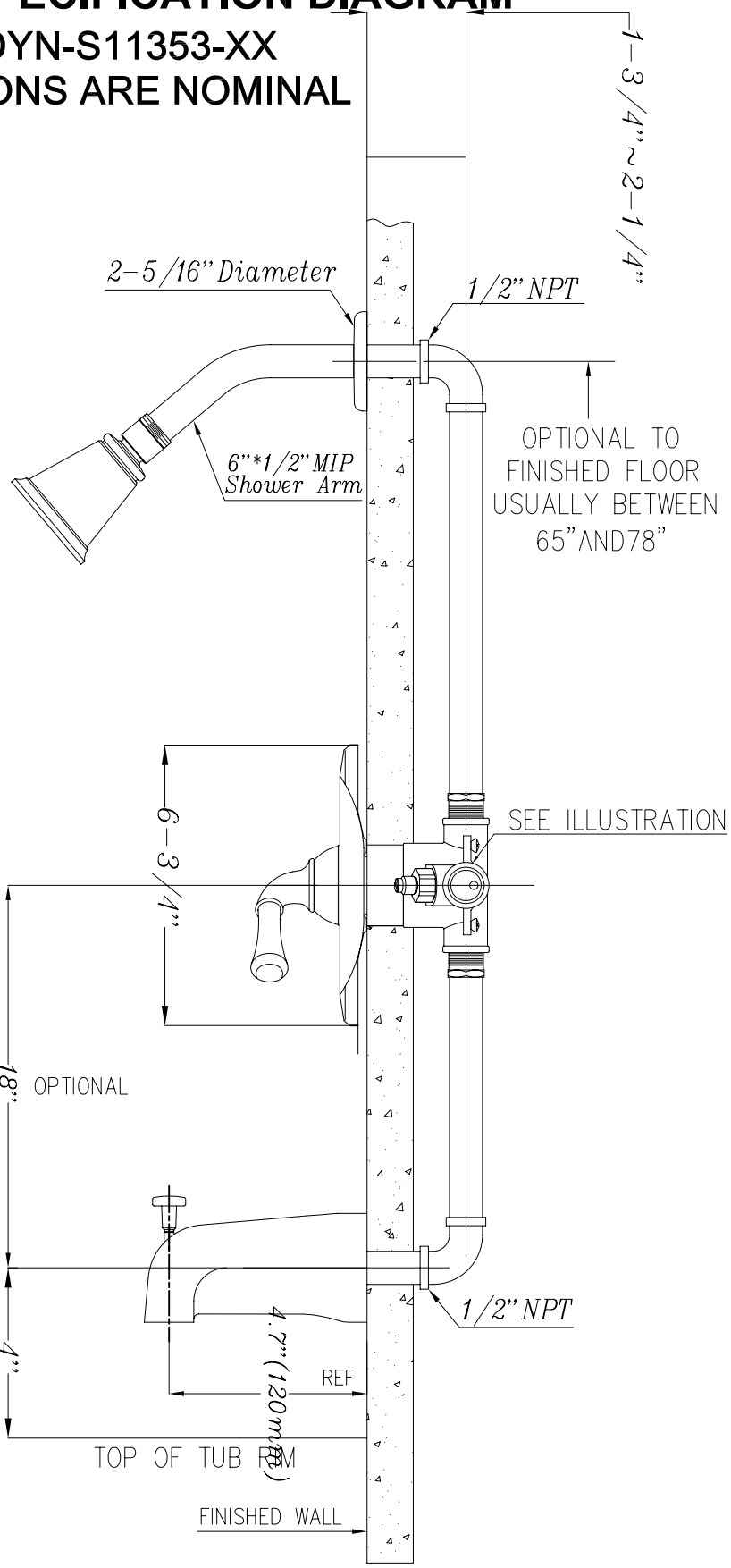

FINISH OPTIONAL:
POLISHED CHROME (CP)
OIL RUBBED BRONZE (ORB)
STAIN NICKEL (SN)
POLISHED BRASS (PVD)

DYNASTY HARDWARE
12265 FOOTHILL BLVD., SYLMAR, CALIFORNIA 91342
Tel : +1-818-896-1171 Fax: +1-818-896-1172 www.dynastyhardware.com

01-20-2011