Walker Edison
furniture company

Item #: D51AL30
Assembly Instructions

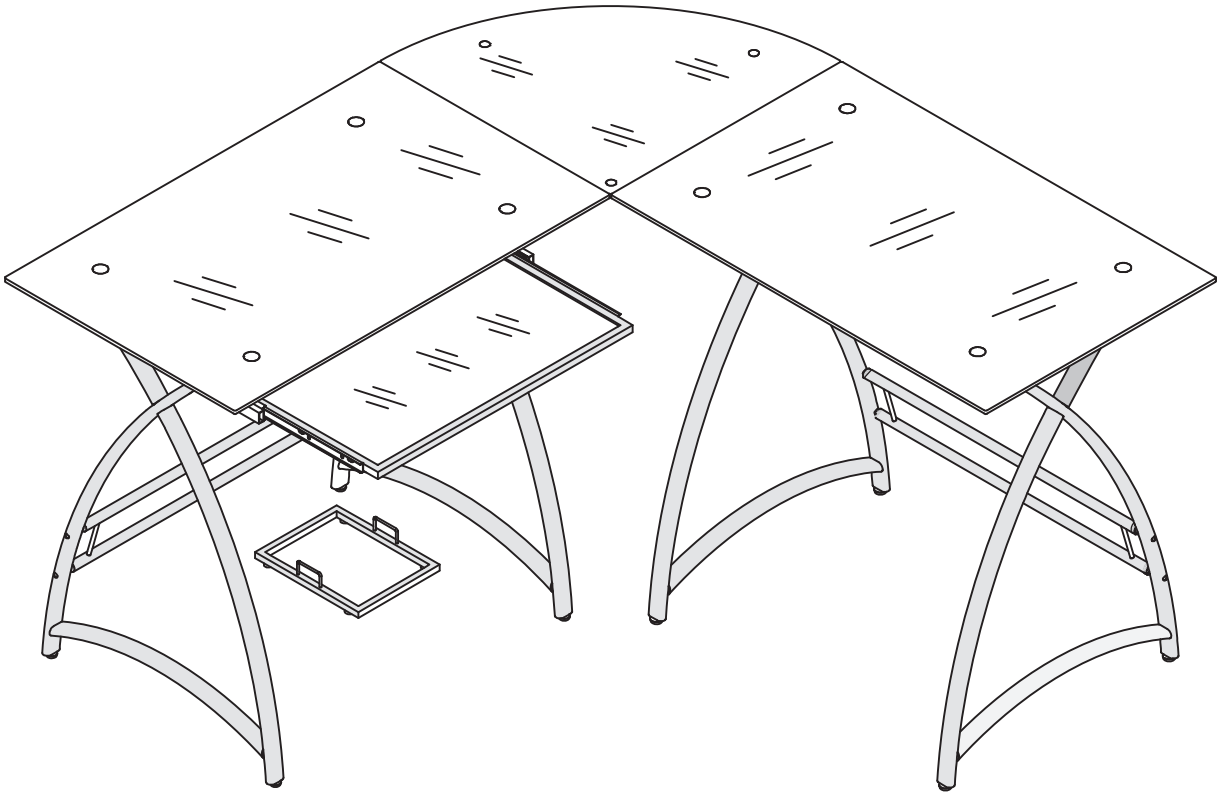

For our most current instructions, to request missing, lost or broken parts, or for any other Customer Service issues, please visit our website at ***www.walkeredison.com*** *or call us at 877-207-5906.*

Revised 02/2011

Parts List

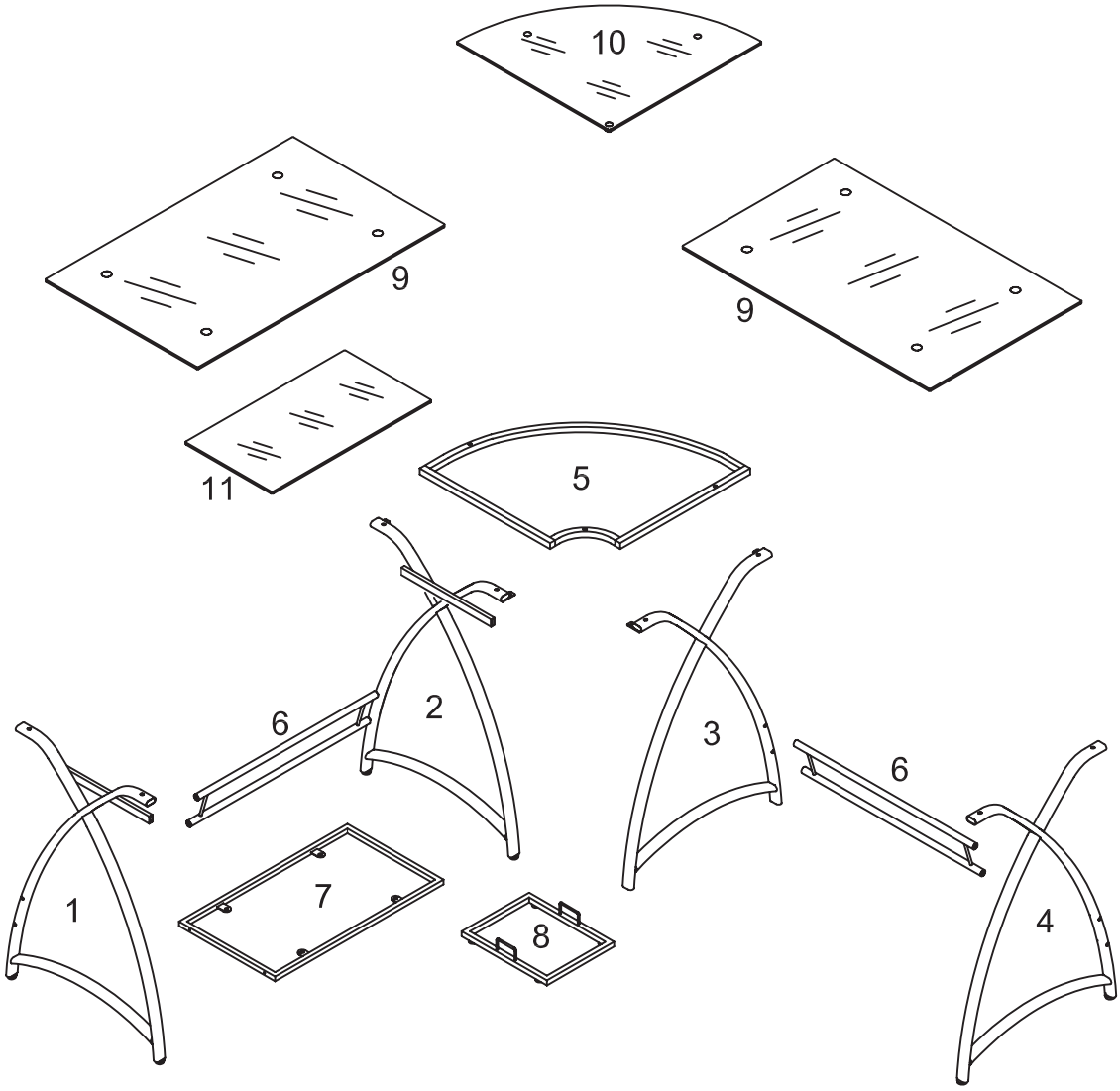

Component List

1		Leg	1 pc
2		Leg	1 pc
3		Leg	1 pc
4		Leg	1 pc
5		Corner frame	1 pc
6		Crossbar	2 pcs
7		Keyboard tray frame	1 pc
8		CPU stand	1 pc
9		Glass	2 pcs
10		Corner glass	1 pc
11		Keyboard tray glass	1 pc

Hardware List

A			Foot	12 pcs
*B			Keyboard tray slider	2 pcs
			**Note: This piece comes preassembled for shipping purposes and must be disassembled to complete the desk assembly.*	
C		M4*10(mm)	Screw	8 pcs
D		M6*50(mm)	Long bolt	8 pcs
E			Plastic washer	8 pcs
F		M6*12(mm)	Short bolt	4 pcs
G		M6*22(mm)	Medium bolt	11 pcs
H			Rubber suction cup	4 pcs
I			Wrench	1 pc

A Phillips head screwdriver is required for assembly (not included)

The hardware quantities listed above are required for proper assembly.
Some extra hardware may also have been included.

Step 1

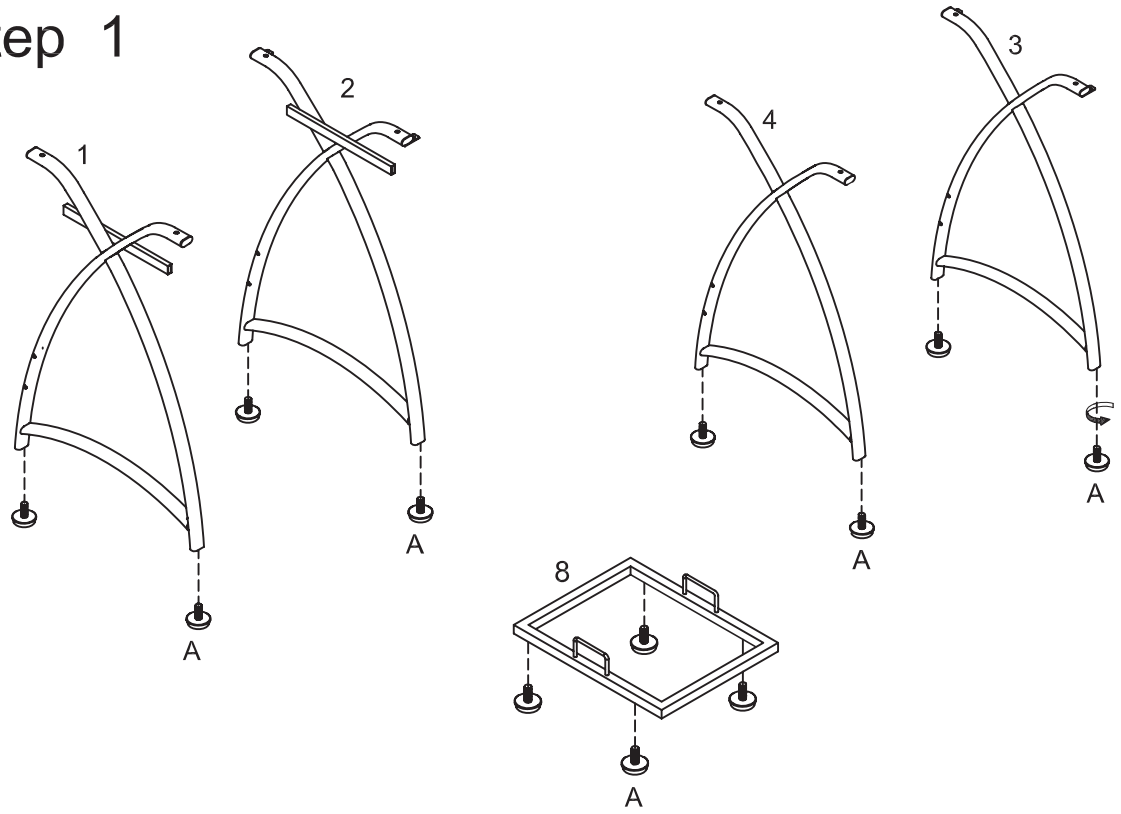

Screw feet (A) into legs (1,2,3,4) and CPU stand (8).

Step 2

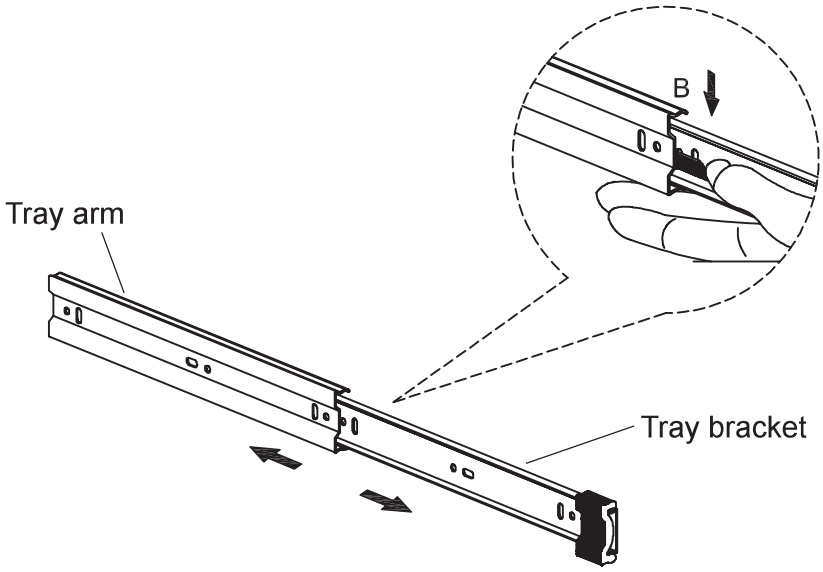

Disassemble keyboard tray slider (B) by sliding the tray arm and tray bracket apart. Depress the small lever of the tray bracket and carefully pull the two pieces apart. Repeat this process for both keyboard tray sliders (B).

Step 3

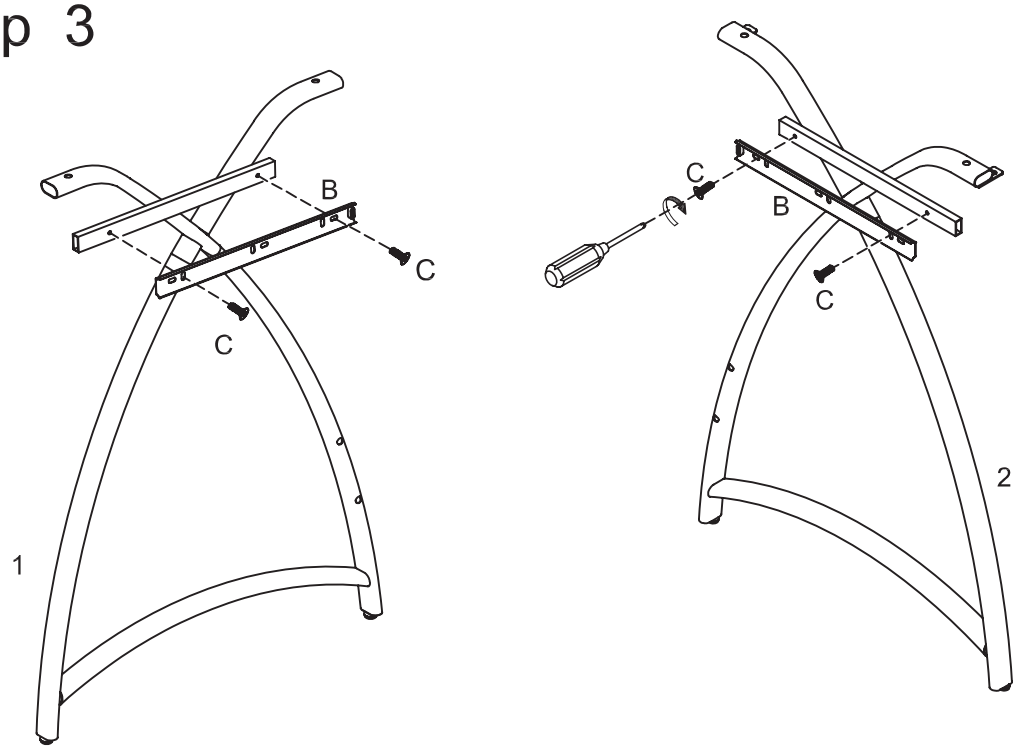

Attach the tray arms of keyboard tray sliders (B) to legs (1,2) using screws (C). *Ensure that the open end of each tray arm is near the front of each leg.* Tighten screws (C) with a screwdriver.

Step 4

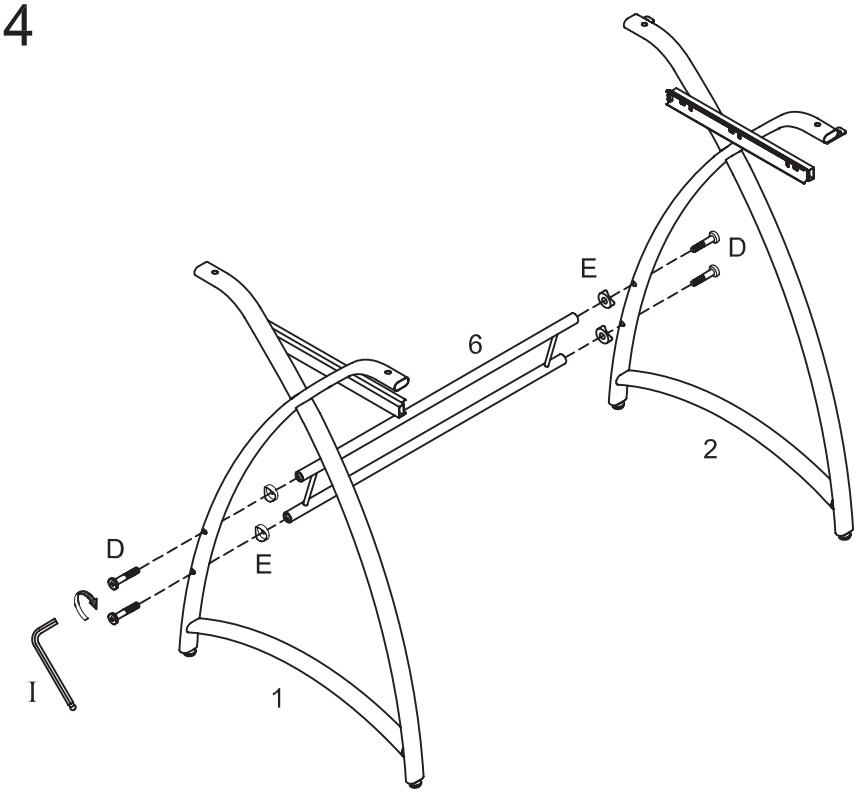

Attach crossbar (6) to legs (1,2) using long bolts (D) and plastic washers (E). Tighten long bolts (D) with wrench (I).

Step 5

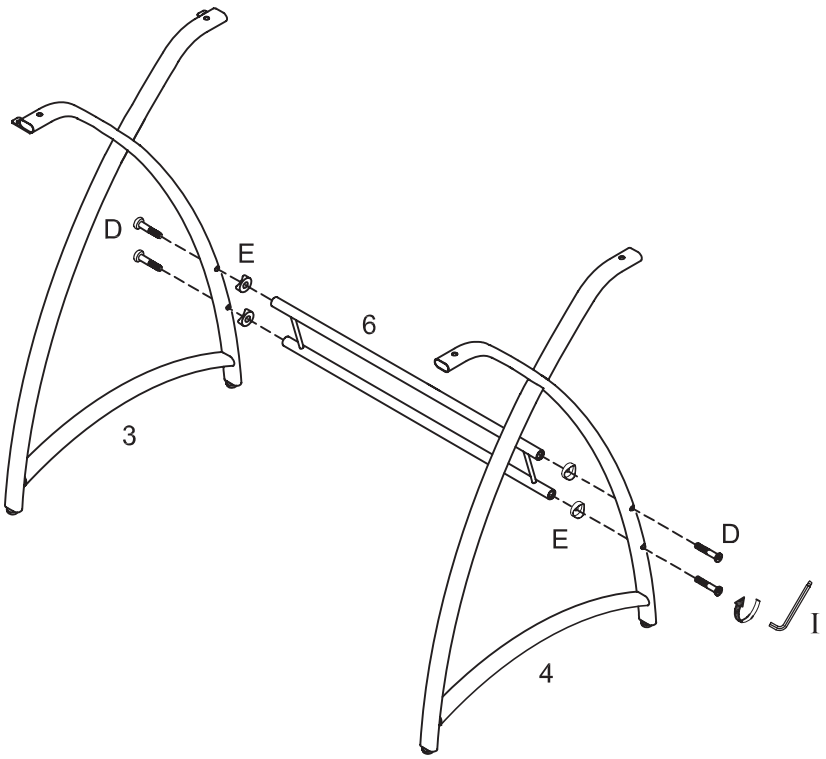

Attach crossbar (6) to legs (3,4) using long bolts (D) and plastic washers (E). Tighten long bolts (D) with wrench (I).

Step 6

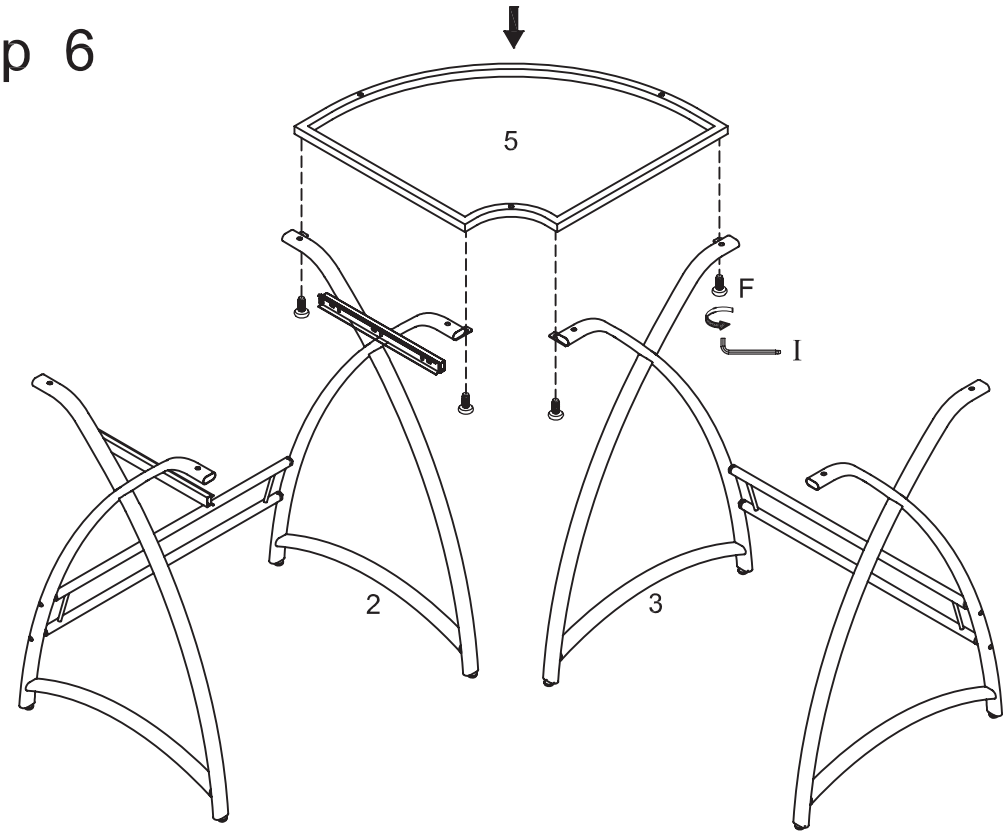

Attach corner frame (5) to legs (2,3) using short bolts (F). Tighten short bolts (F) with wrench (I).

Step 7

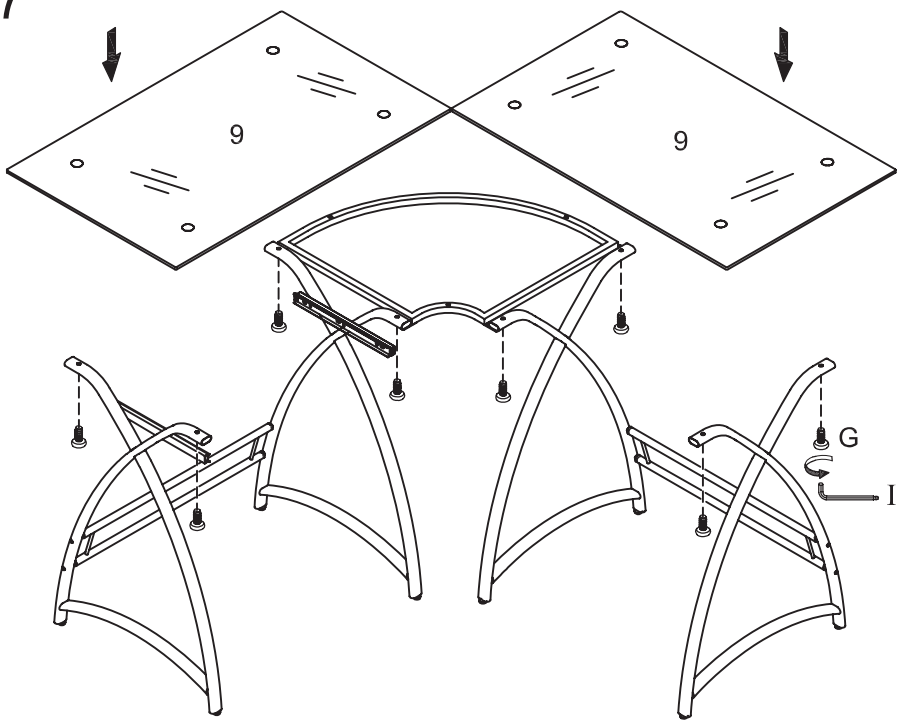

Attach glass (9) to the desk frame using medium bolts (G). Tighten medium bolts (G) with wrench (I).

Step 8

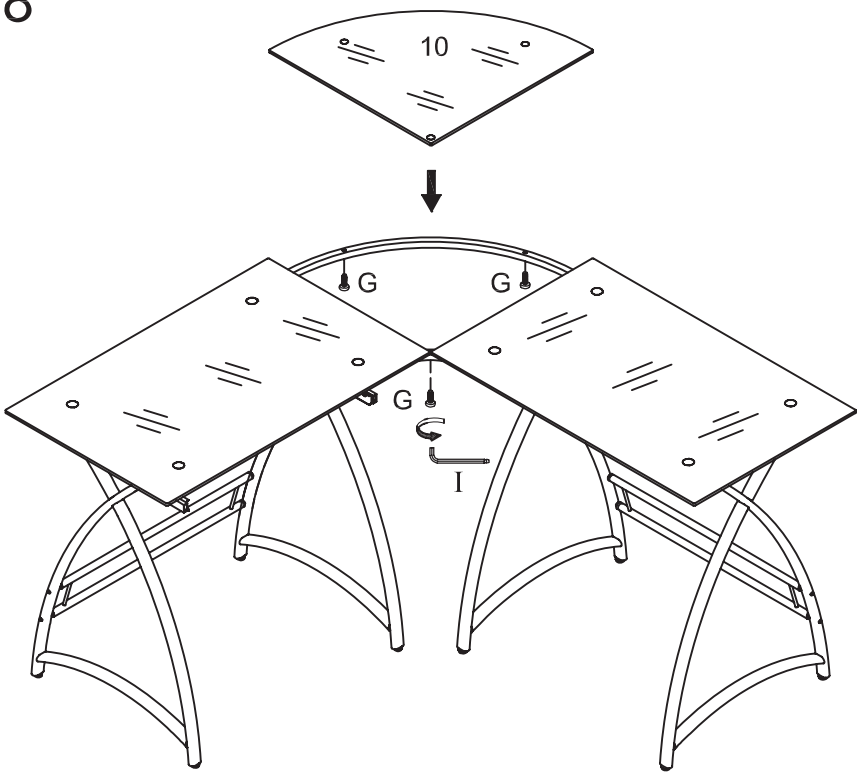

Attach middle glass (10) to the desk frame using medium bolts (G). Tighten medium bolts (G) with wrench (I).

Step 9

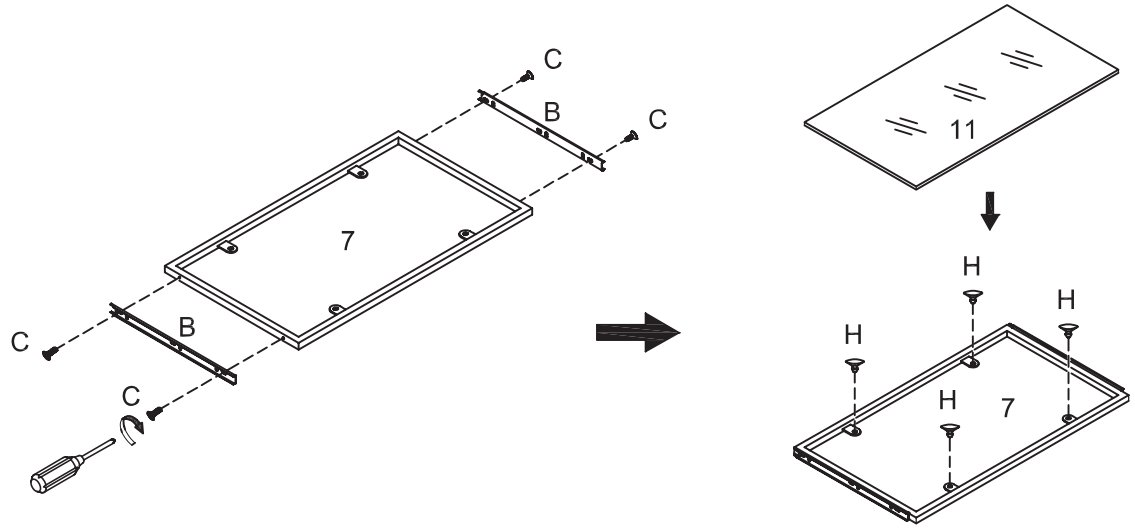

Attach the tray brackets of keyboard tray sliders (B) to keyboard tray frame (7) using screws (C). *Ensure that the open end of each tray bracket is near the back of keyboard tray frame (7).* Tighten screws (C) with a screwdriver. Insert rubber suction cups (H) into keyboard tray frame (7). Carefully lay keyboard tray glass (11) in place and gently press to secure.

Step 10

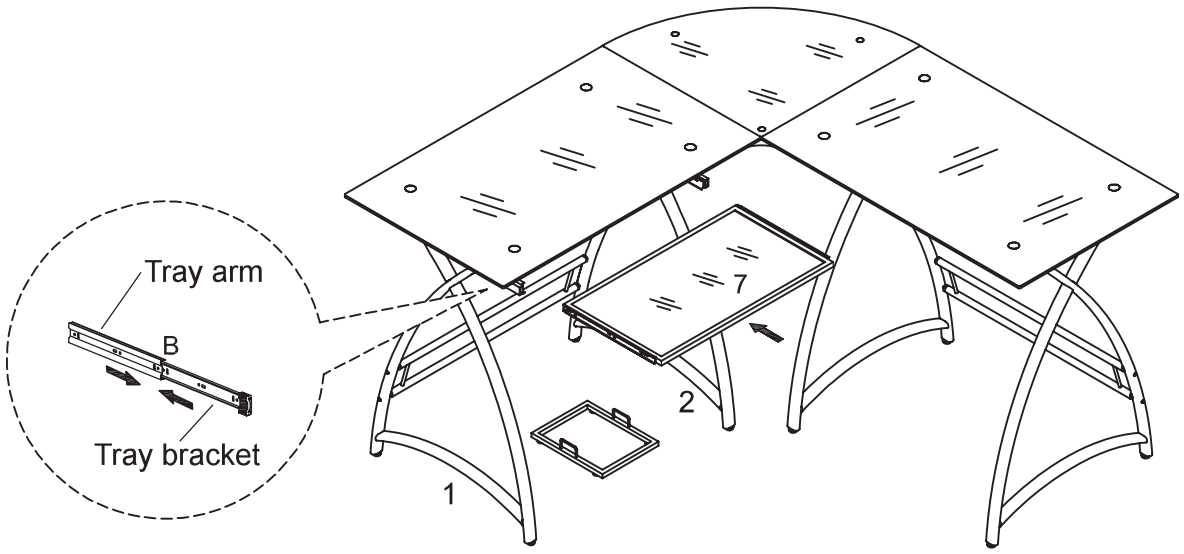

Carefully slide keyboard tray frame (7) into place. *The tray brackets attached to keyboard tray frame (7) will slide into the tray arms attached to legs (1,2).*

Step 11

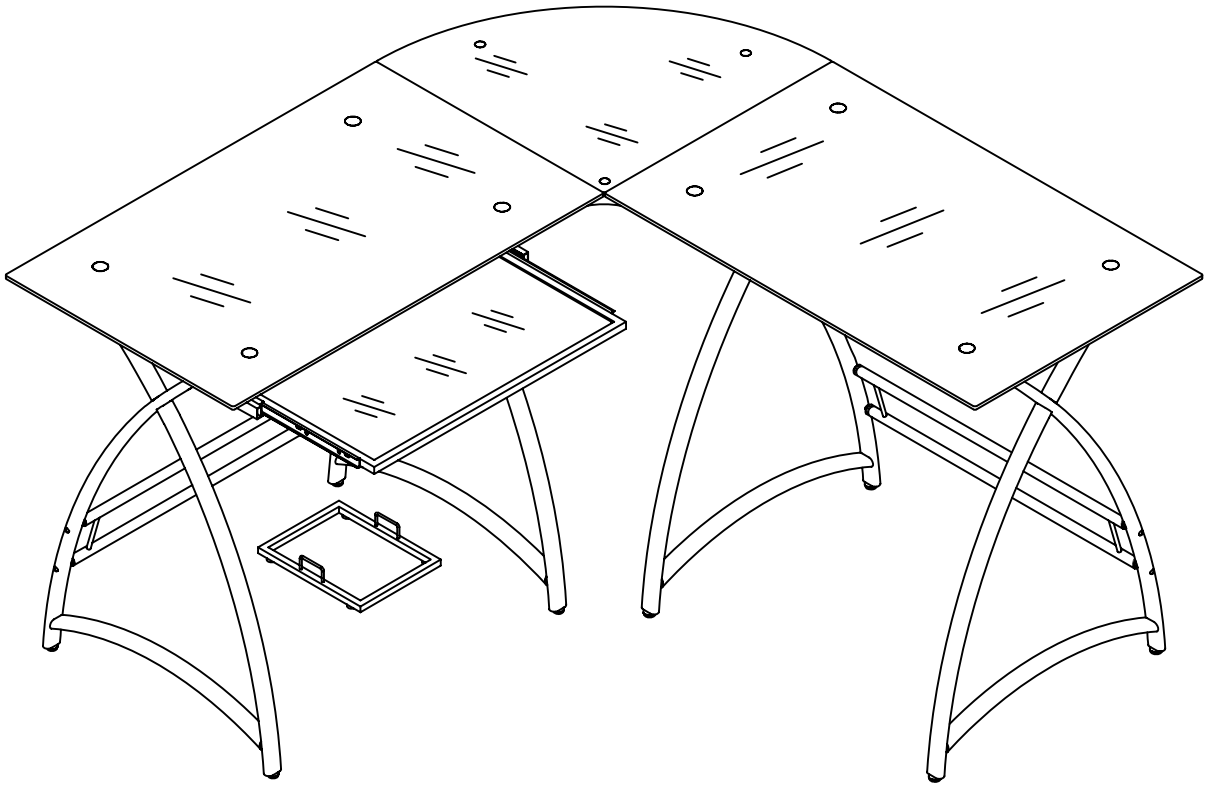

Final Assembly