UKINOX®

SPECIFICATIONS

MODEL D 376 60 40 R
UNDERMOUNT TYPE

GENERAL

Fine quality sink bowls formed of 18 gauge
BA 304 18/10 nickel bearing stainless steel.

DESIGN FEATURES

Bowl Depth	: 8” / 10” large bowl 7” / 8” small bowl'
Finish	: Soft Satin Finish
Underside	: Sound absorbing pads and special paint applied to dampen sound
Drain Opening	: 3-1/2'' - 3-1/2''

OPTIONAL ACCESSORIES

Stainless Steel Bottom Grid
Stainless Steel Rinsing Basket
Hardwood Cutting Board

SINK DIMENSIONS (INCHES)

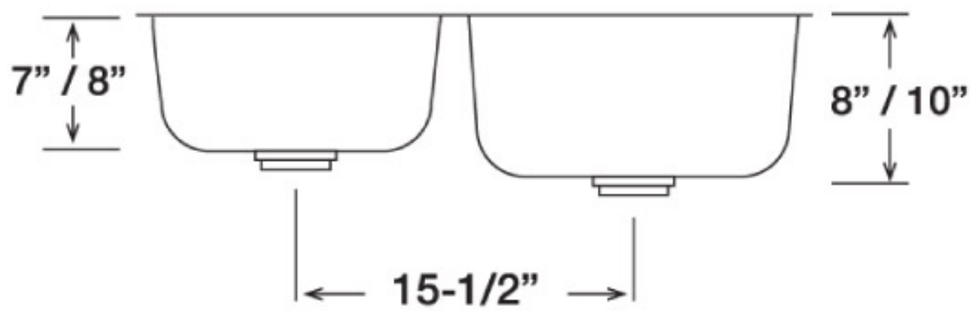

INSTALLATION PROFILE*

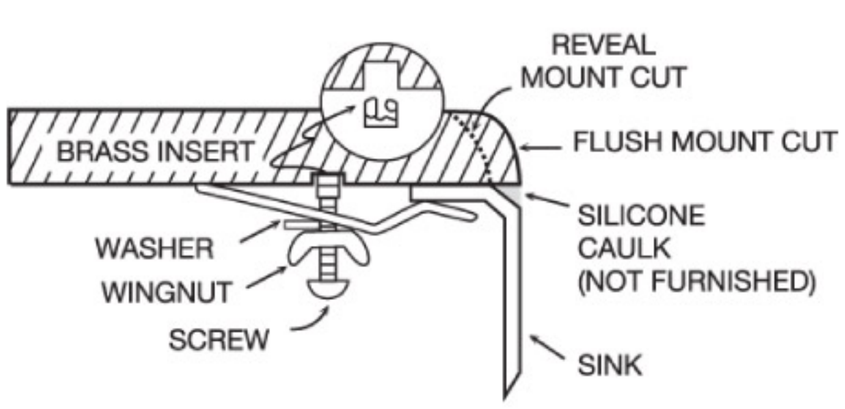

*Template and countertop mounting clips are packed with every sink

nqa. ISO 9001 Registered — UKAS QUALITY MANAGEMENT 015

These sinks comply with ASME A112.19.3

These sinks are listed by the International Association of Plumbing and Mechanical Officials as meeting the requirements of the Uniform Plumbing Code.

8 698613 813753

Ukinox reserves the right to change product specifications without notice.

Printed in USA © 2011 Ukinox

Ukinox USA Inc. 5601 Powerline Rd. Ft.Lauderdale,FL 33309

www.ukinox.com

UKINOX®

SPECIFICATIONS

MODEL D 376 60 40 L
UNDERMOUNT TYPE

GENERAL

Fine quality sink bowls formed of 18 gauge
BA 304 18/10 nickel bearing stainless steel.

DESIGN FEATURES

Bowl Depth	: 8” / 10” large bowl 7” / 8” small bowl'
Finish	: Soft Satin Finish
Underside	: Sound absorbing pads and special paint applied to dampen sound
Drain Opening	: 3-1/2'' - 3-1/2''

OPTIONAL ACCESSORIES

Stainless Steel Bottom Grid
Stainless Steel Rinsing Basket
Hardwood Cutting Board

SINK DIMENSIONS (INCHES)

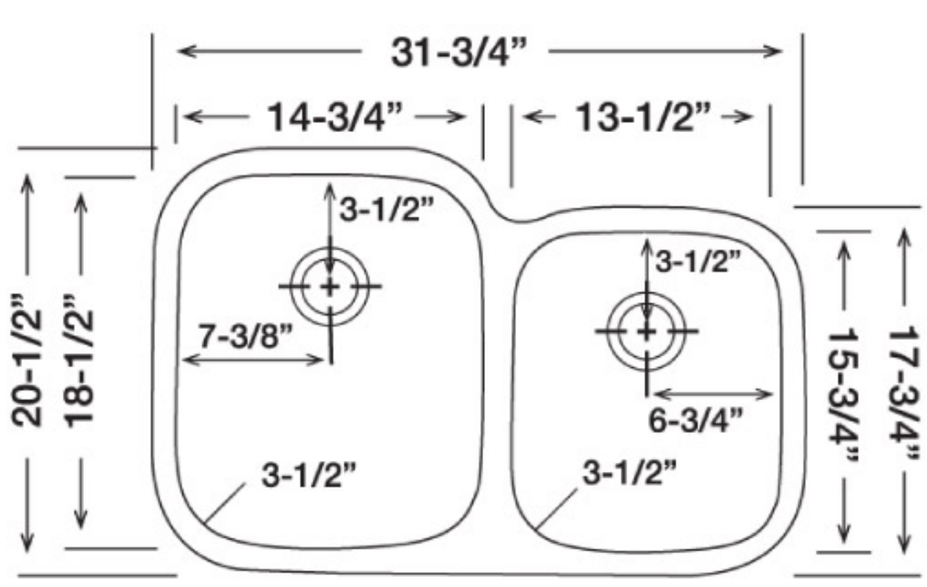

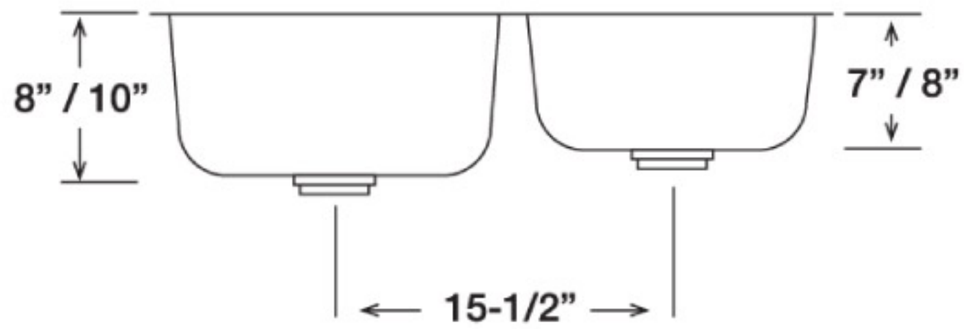

INSTALLATION PROFILE*

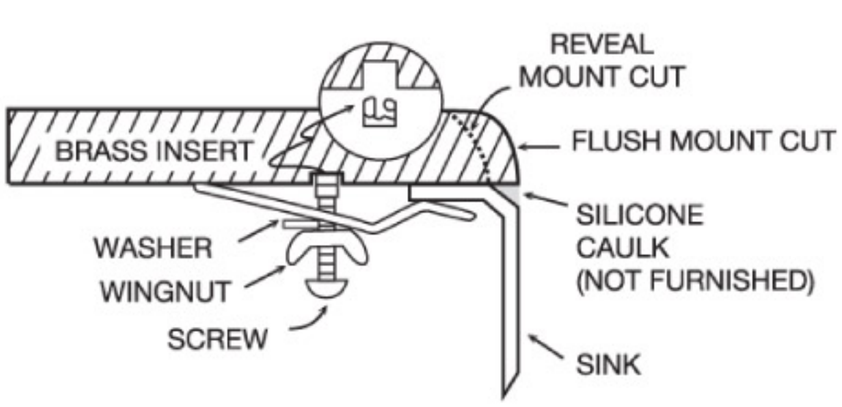

*Template and countertop mounting clips are packed with every sink

These sinks comply with ASME A112.19.3
These sinks are listed by the International Association of Plumbing and Mechanical Officials as meeting the requirements of the Uniform Plumbing Code.

8 698613 813753

Ukinox reserves the right to change product specifications without notice.

Printed in USA © 2011 Ukinox

Ukinox USA Inc. 5601 Powerline Rd. Ft.Lauderdale,FL 33309

www.ukinox.com