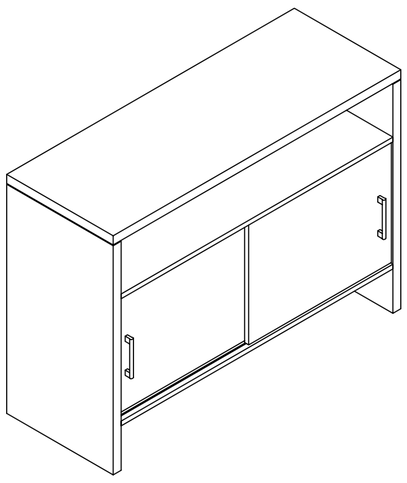

Assembly Instruction

Bossa Sideboard

Model Number:2Y-21-73

MODUS FURNITURE INTERNATIONAL

IMPORTANT NOTE :This carton includes the parts to assemble 1,2,3 complete Bossa Sideboard ,it will take 10-15 minutes to complete.

PARTS LIST

Before you begin , please layout all parts and ensure you have the correct count .

#	DESCRIPTION	QTY	ILLUSTRATION
A	Shelf Support	4	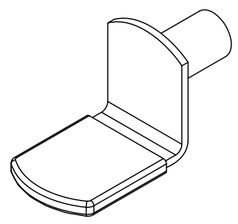

ASSEMBLY INSTRUCTIONS

STEP	INSTRUCTIONS	ILLUSTRATION
1	As shown in the figure , Laying on working surface.	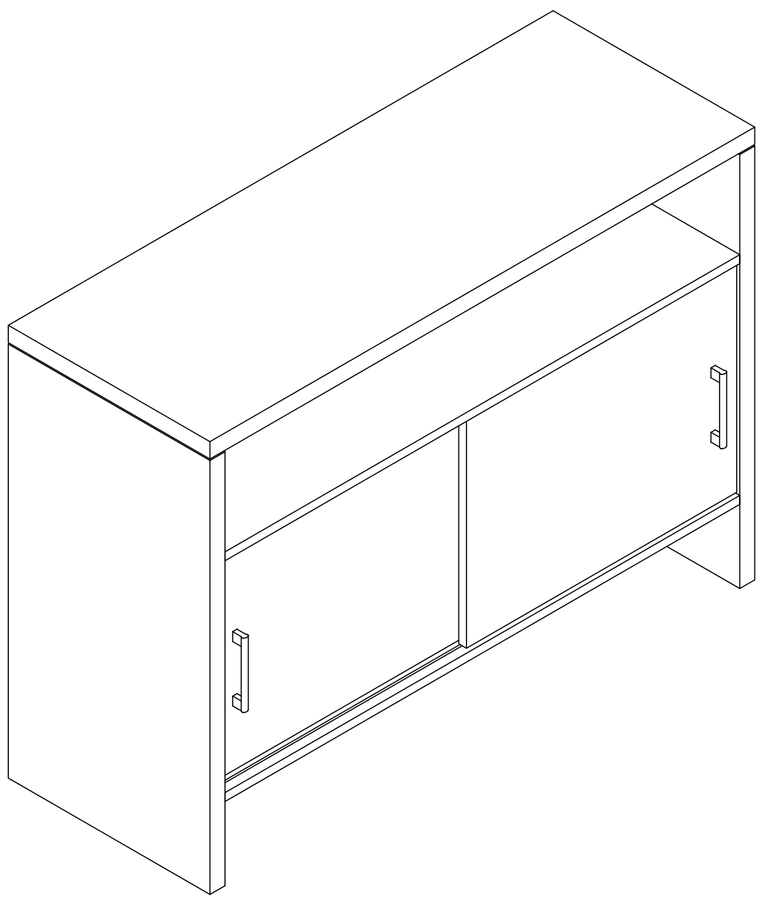

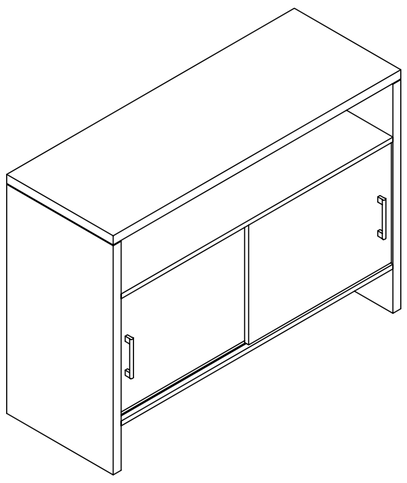

Assembly Instruction

Bossa Sideboard

Model Number:2Y-21-73

MODUS FURNITURE INTERNATIONAL

IMPORTANT NOTE :This carton includes the parts to assemble 1,2,3 complete Bossa Sideboard ,it will take 10-15 minutes to complete.

ASSEMBLY INSTRUCTIONS

STEP	INSTRUCTIONS	ILLUSTRATION
2	Insert the shelf support (A) to the holes of the side plate,then place the adjustable shelf on the shelf support(A).	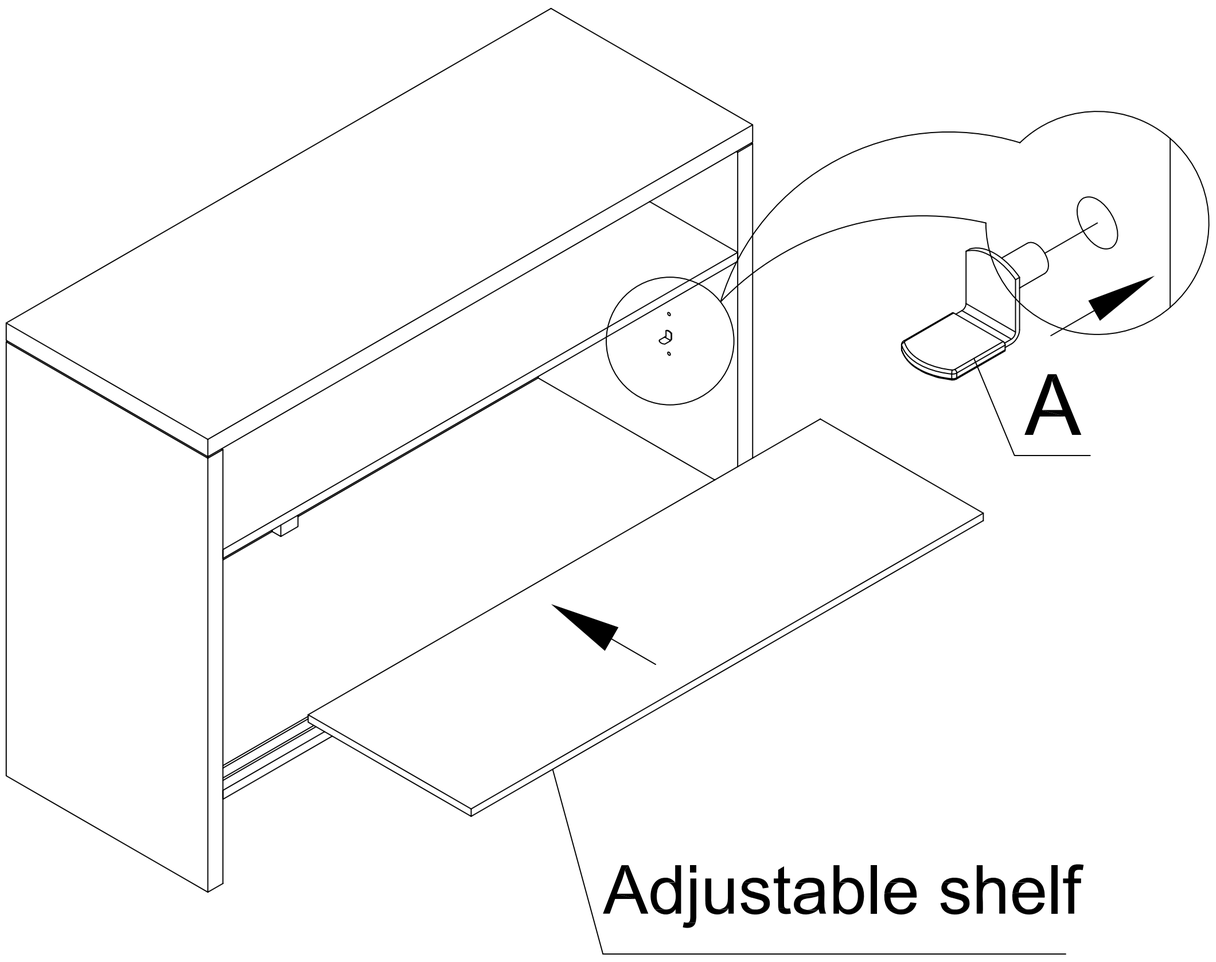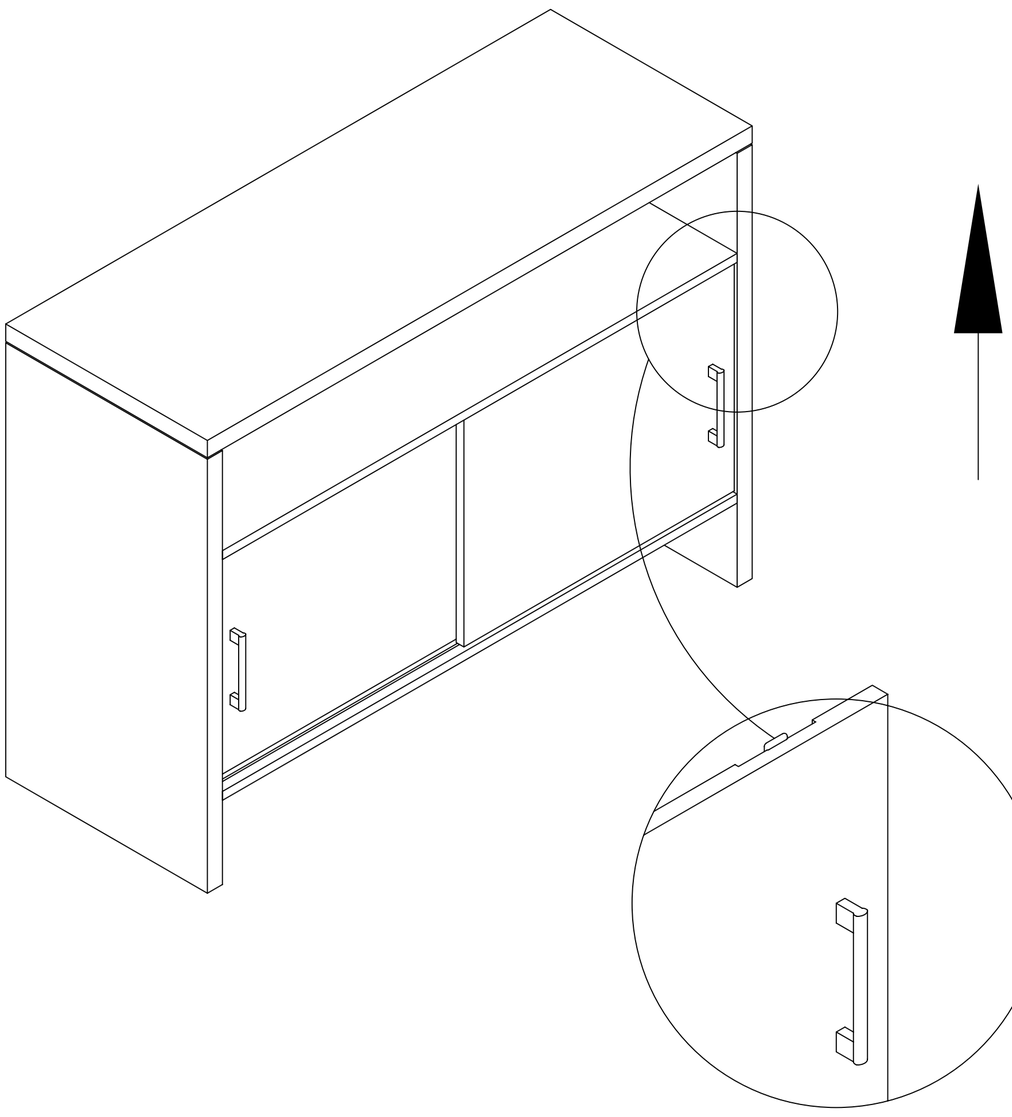
3	Put the doors to the assembled unit, now your bossa sideboard is ready to use .