ASSEMBLY INSTRUCTIONS

SKU#516757

NOTE: Please consult a qualified electrician if you are not certain of the installation.

CAUTION: Before starting the installation or service, disconnect the power by turning off the circuit breaker or removing the fuse at the fuse box. **Use silicon caulking to seal between wall plate and wall. Leave bottom unsealed so moisture can drain out.**

1. Carefully unpack the fixture, lay out all parts on a clean surface.
2. Attach the cross bar to outlet box using provided outlet box screws.
3. Tie ground wire from outlet box and from fixture to the ground screw on the cross bar. Connect white wire from fixture to white wire (neutral wire) from supply circuit. Connect black wire from fixture to black wire (live wire) from supply circuit. Cover connections using provided wire connectors.
4. Place the fixture body against wall by aligning the protruding mounting screws all the way through the wall plate and tighten lock nuts and washers to mounting screws until the fixture body is held firmly against the wall.
5. Twist nipple A into the bushing. Attach cap over the nipple B and screw with finial.
6. Place the socket sleeves onto the sockets. Install the bulbs (sold separately).
8. Reconnect the power.

This light only can be installed in a downlight position.

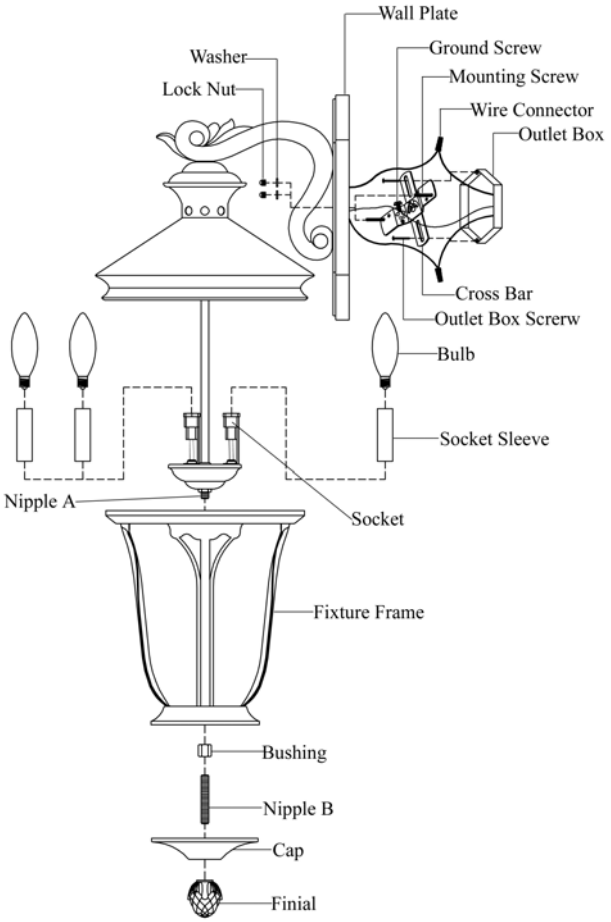

DESIGNHOUSE