TREVIE 4 LT Vanity Light

Specifications

Material Construction:	Formed Steel
Lens:	Antique Alabaster Glass
Lamp Type & Wattage:	Four 60W, medium base incandescent lamps
Mounting:	Wall mounted; Suitable for up/down mounting
Finish:	Oil Rubbed Bronze (US10B)
Voltage:	120V
Weight:	7.0 lbs
Companion Fixtures:	Chandeliers, wall/vanity lights, ceiling mounts, pendants

Dimensions

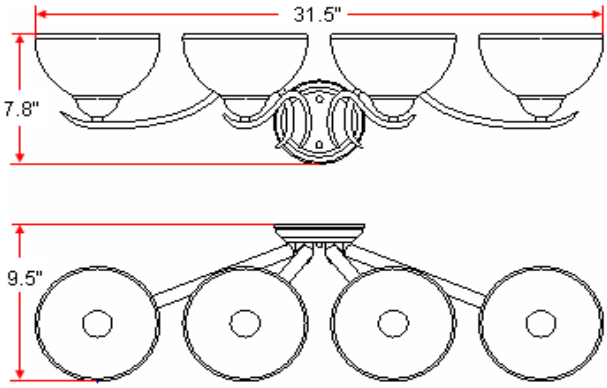

Warranty & Compliances

Warranty	10 Year Limited Warranty
UL	UL/cUL; Suitable for damp locations
ADA	N/A
EnergyStar	N/A

Companion Fixtures

4 LT Vanity Light	517474	TRU MATCH
1 LT Wall Mount	517441	TRU MATCH
2 LT Wall Mount	517458	TRU MATCH
3 LT Vanity Light	517466	TRU MATCH
2 LT Ceiling Mount	517375	TRU MATCH
3 LT Chandelier	517409	TRU MATCH
5 LT Chandelier	517490	TRU MATCH
Pendant	517391	TRU MATCH
Mini Pendant	517516	TRU MATCH

Type:
Job:
Order Code:
Approvals:

Design House reserves the right to make changes in materials, specifications & models at any time. Design House also reserves the right to discontinue product without notice or obligation.