WWW.blvdproducts.com

MODEL # B-SH-612
DESCRIPTION - 6 x 12 INCH SQUARE SHOWER HEAD
MATERIAL(S) - BRASS (CRHOME FINISH) STAINLESS STEEL

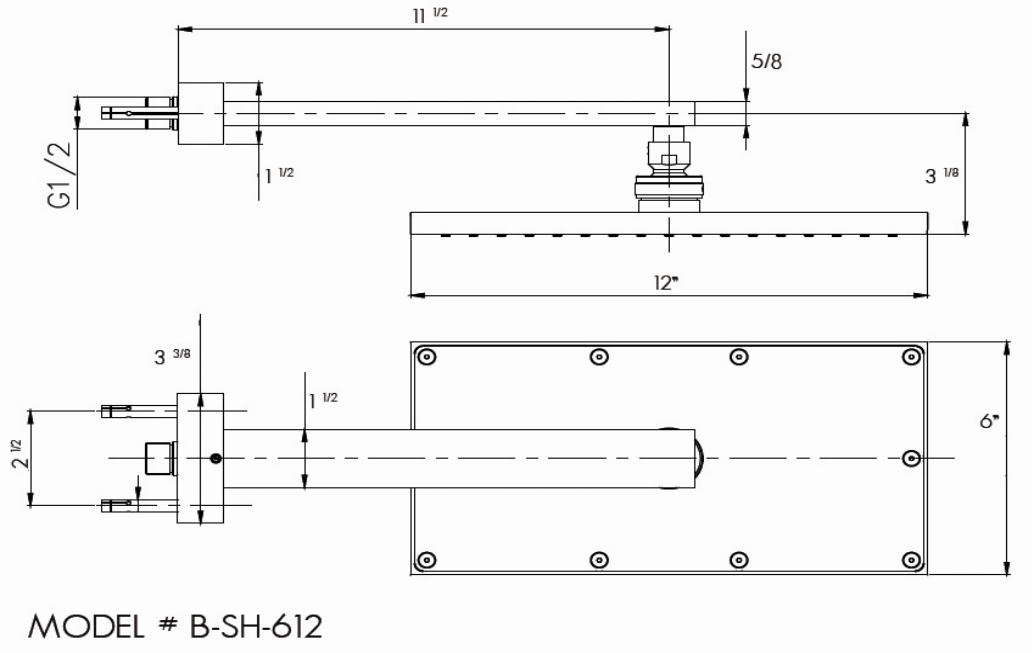

SUBMITTAL

PRODUCT MODEL - B-SH-612
MATERIAL - BRASS STAINLESS STEEL
FINISH - POLISHED CHROME ☐ STAINLESS STEEL ☐

APPROVED BY: _____
ORGANIZATION - _____
DATE - _____
CONTACT #

Dimensions subject to change without notice