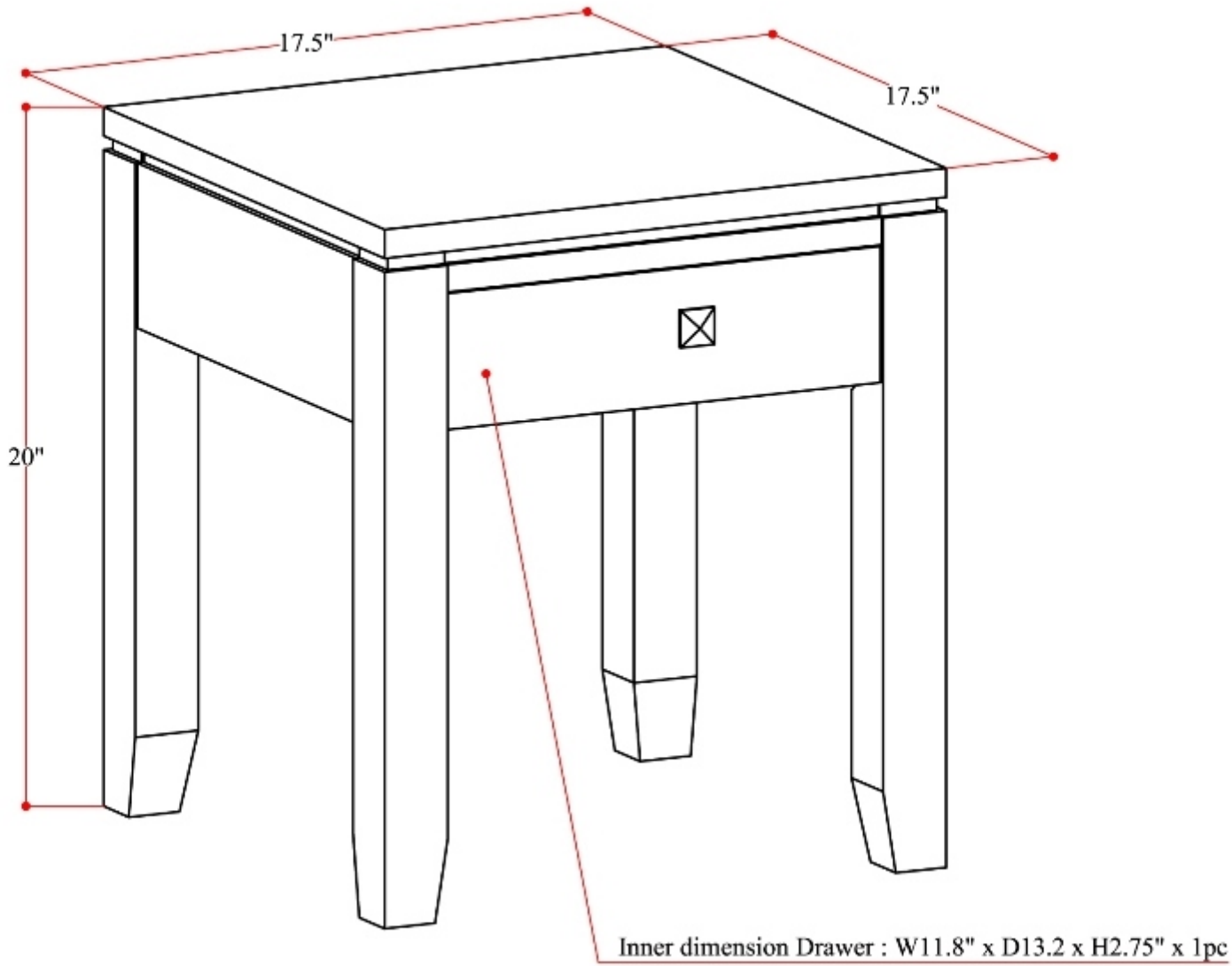
17.5"
17.5"
20"
Inner dimension Drawer : W11.8" x D13.2 x H2.75" x 1pc