Riverside FURNITURE

email info@riverside-furniture.com

Fortunado Tables Assembly Instructions

Made in China

26010
Chairside Table

Components and Hardware List

M5/16" x 3/4" Allen Head Bolt 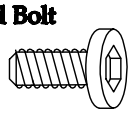 A 8 pcs.	5/16" Spring Washer B 12 pcs.	5/16"x18mmFlat Washer C 12 pcs.	5mm Allen Wrench D 1 pc.
5/16" x 1" Allen Head Bolt 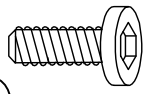 E 4 pcs.	Top and Apron F 1 pc.	Metal leg G 4 pcs.	Bottom shelf H 1 pc

Be sure to check all packing material carefully for small parts, which may have come loose inside the carton during shipment.

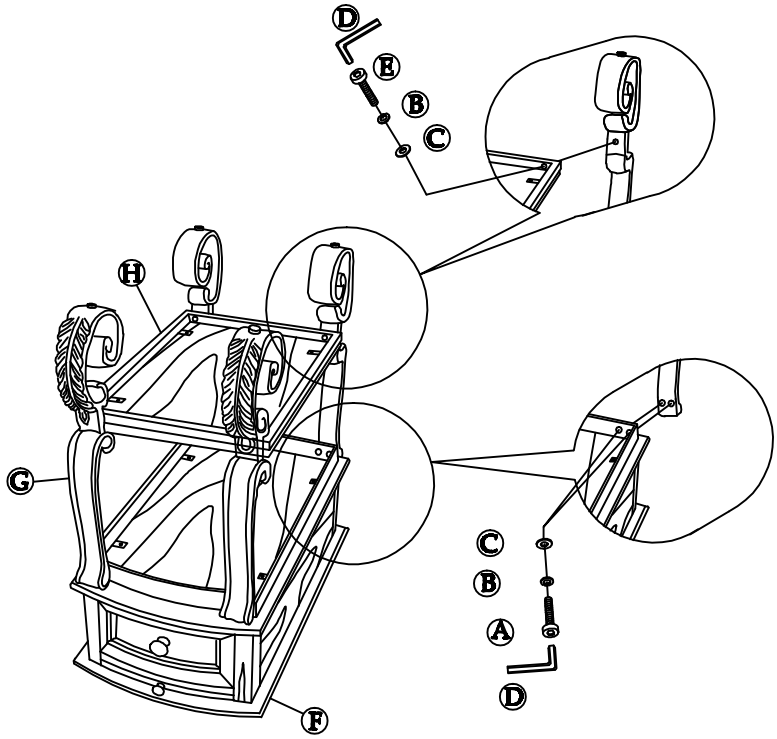

Note:

1. To prevent possible scratches or damage, assemble Table-Cabinet upside down on a soft surface such as a blanket or carpet.
2. Attach the four Metal Legs (G) onto the Top/Apron (F) using two 3/4" long Allen-head bolts (A), Spring washers (B) and Flat washers (C) as shown. Do not tighten until after next step.
3. Carefully attach the Bottom Shelf (H) to four Legs using four 1" long Allen head bolts (E), Spring washers (B) and Flat washers (C) as shown.
4. Tighten all the bolts using the supplied Allen Wrench (D).
5. Carefully turn table upright.
6. If required, the floor glides that are screwed into the bottom of each leg can be adjusted to compensate for any unevenness if flooring or the table.