OAKRIDGE CORNER TV UNIT ASSEMBLY INSTRUCTION

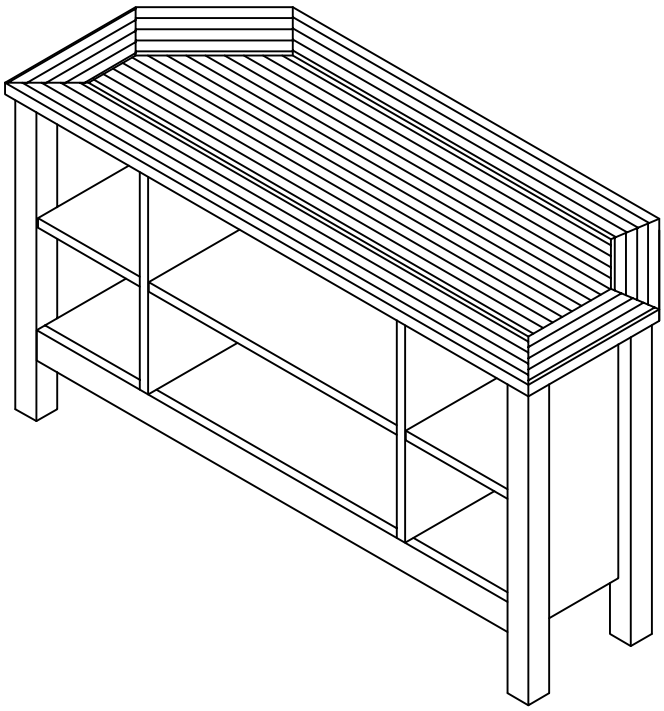

IMPORTANT

PLEASE READ BEFORE YOU CONTINUE FURTHER

THE PRODUCT YOU HAVE PURCHASED WILL GIVE YOU MANY YEARS OF SERVICE IF YOU FOLLOW THE GUIDELINES FOR ITS SAFE ASSEMBLY AND PERIODIC MAINTENANCE AND CLEANING.

DO NOT USE ANY TOOLS OTHER THAN THOSE SHOWN.

ANY SPANNERS OR ALLEN KEYS REQUIRED ARE INCLUDED WITH THE FITTINGS KIT

DO NOT FOR ANY REASON USE A POWER TOOL TO ASSEMBLE THIS PRODUCT.ITS USE WILL INVALIDATE ANY CLAIM YOU MAY HAVE AND COULD MAKE THIS PRODUCT UNSAFE.

DEPENDING ON THE AMOUNT OF USE THIS PRODUCT RECEIVES IT MAY BE NECESSARY TO TIGHTEN UP THE FIXINGS FROM TIME TO TIME.THIS IS COMPLETELY NORMAL FOR ANY FLAT PACK FURNITURE.

FOR CLEANING YOU MAY USE A DAMP CLOTH (NOT WET)DRY DUSTER AND NORMAL FURNITURE POLISH.

THE SURFACE OF THIS ITEM IS NOT HEAT RESISTANT.
ALWAYS USE A PLACEMAT UNDER HOT OR COLD ITEM TO PREVENT MARKING.

OAKRIDGE CORNER TV UNIT ASSEMBLY INSTRUCTION

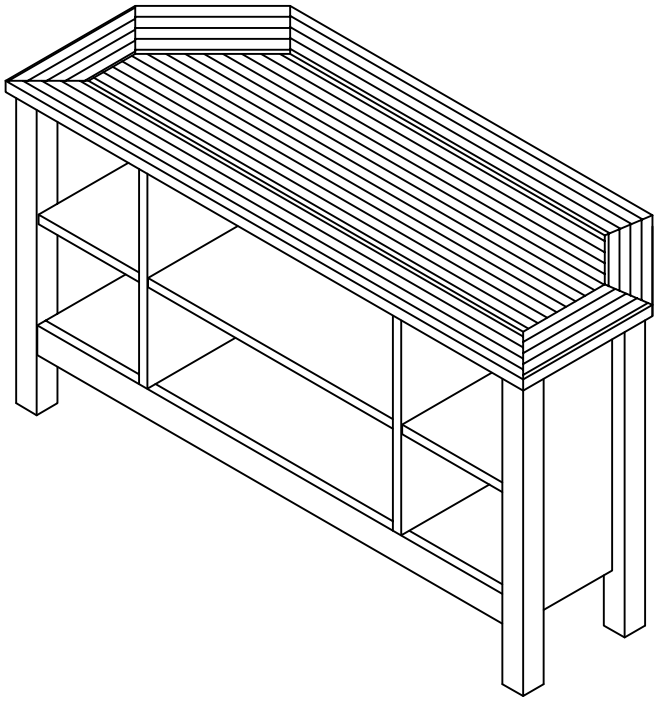

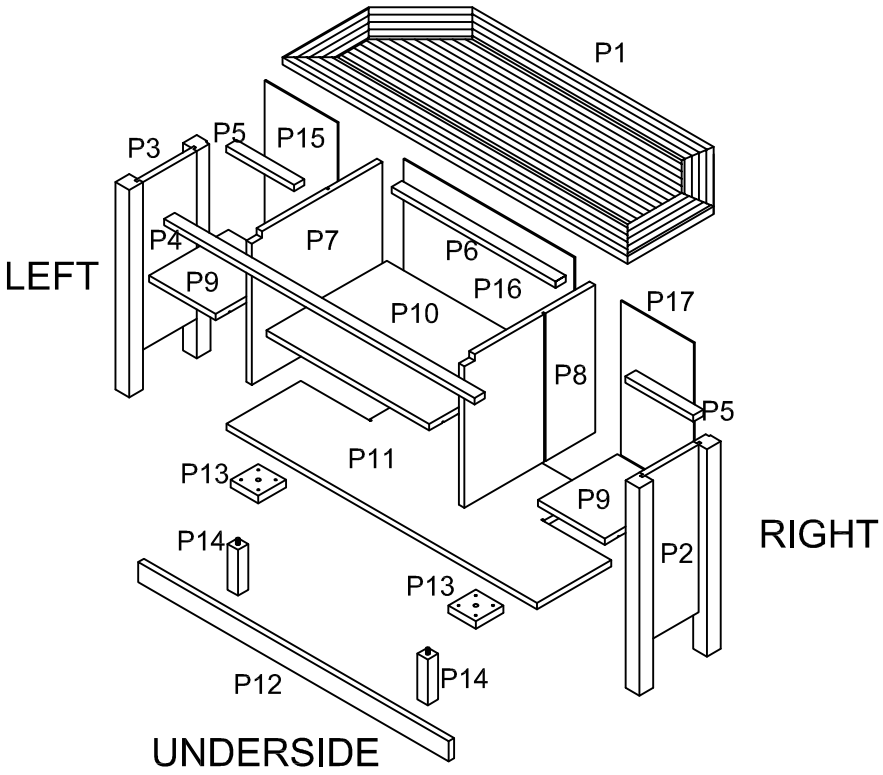

	PARTS	SIZE	Q' TY
1	PANHAND SCREWS	ø6.5*12MM	28PCS
2	WOOD SCREWS	ø8*25MM	14PCS
3	DOWELS	ø8*30MM	20PCS
4	CAM NUTS	ø15*12MM	21PCS
5	CAM BOLTS	ø6.5*35MM	21PCS
6	GLUE		1PC
7	SHELF PIN	ø5*16MM	12PCS

USE OF POWER TOOLS TO ASSEMBLE THIS PRODUCT WILL INVALIDATE ANY CLAIM AND MAY DAMAGE THIS PRODUCT MAKING IT UNSAFE

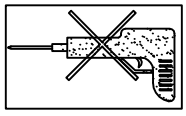

(SCREW DRIVER NOT PROVIDED)

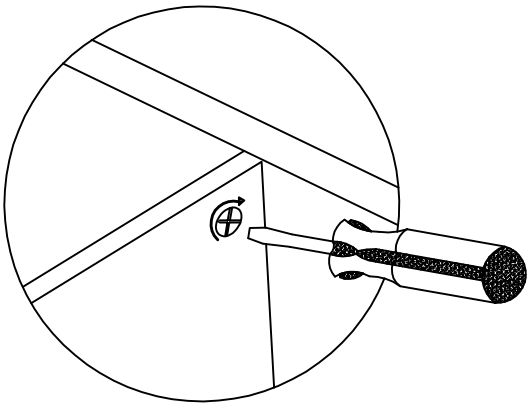

Use a flat blade screwdriver to tighten the cam nuts. A quarter turn clockwise is all that is needed.

This is how a cam nut works...

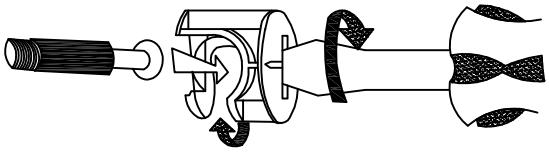

The head of bolt goes into the wide mouth of the cam nut.You then turn the nut so the narrow part closes over the bolt.

TWO PERSONS REQUIRED TO ASSEMBLE THIS PRODUCT.

1. Lay out all of the components on a soft surface as if you were preparing to do a jigsaw puzzle.

2. Carefully identify each component,especially those that are similar The most common mistake is getting things back to front.

3. Separate and identify each component from the hardware pack and rest each one in its proper location before fastening.

4. DO NOT over-tighten screws

5. DO NOT set glue until you are certain that the parts belong together.

STEP 1

You Will Need:

3*Cam Bolts (5)

3*Cam Nuts (4)

2*Dowels (3)

Glue (6)

8*Wood Screws(2)

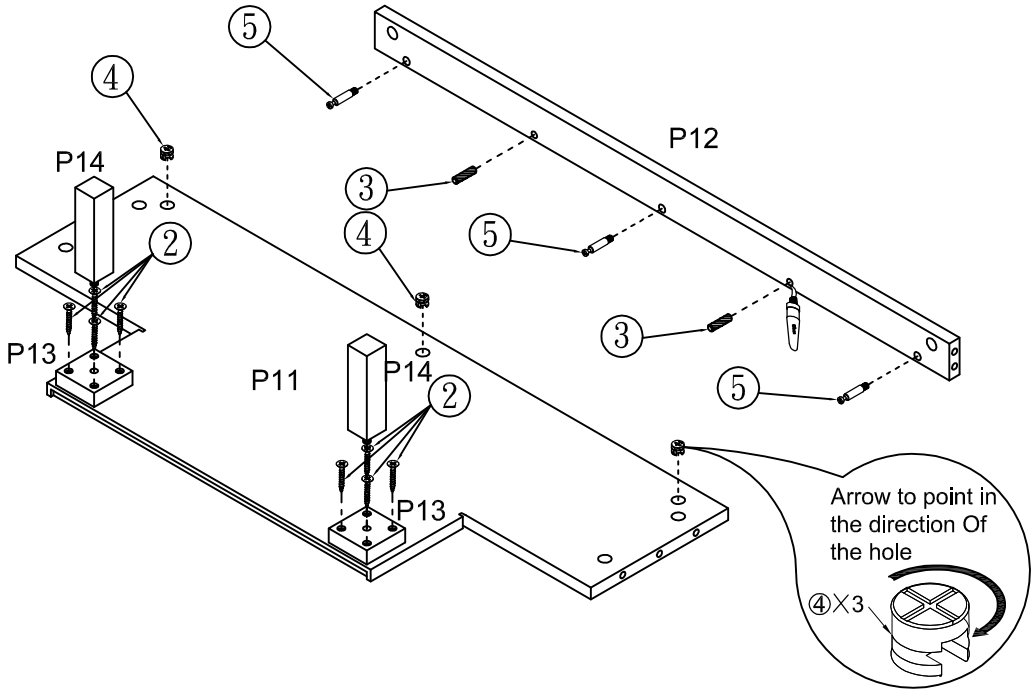

When inserting the cam nuts,rotate the cam nuts so the arrow points towards the incoming cam bolts.

STEP 2

You Will Need:

3*Cam Bolts (5)

3*Cam Nuts (4)

2*Dowels (3)

Glue (6)

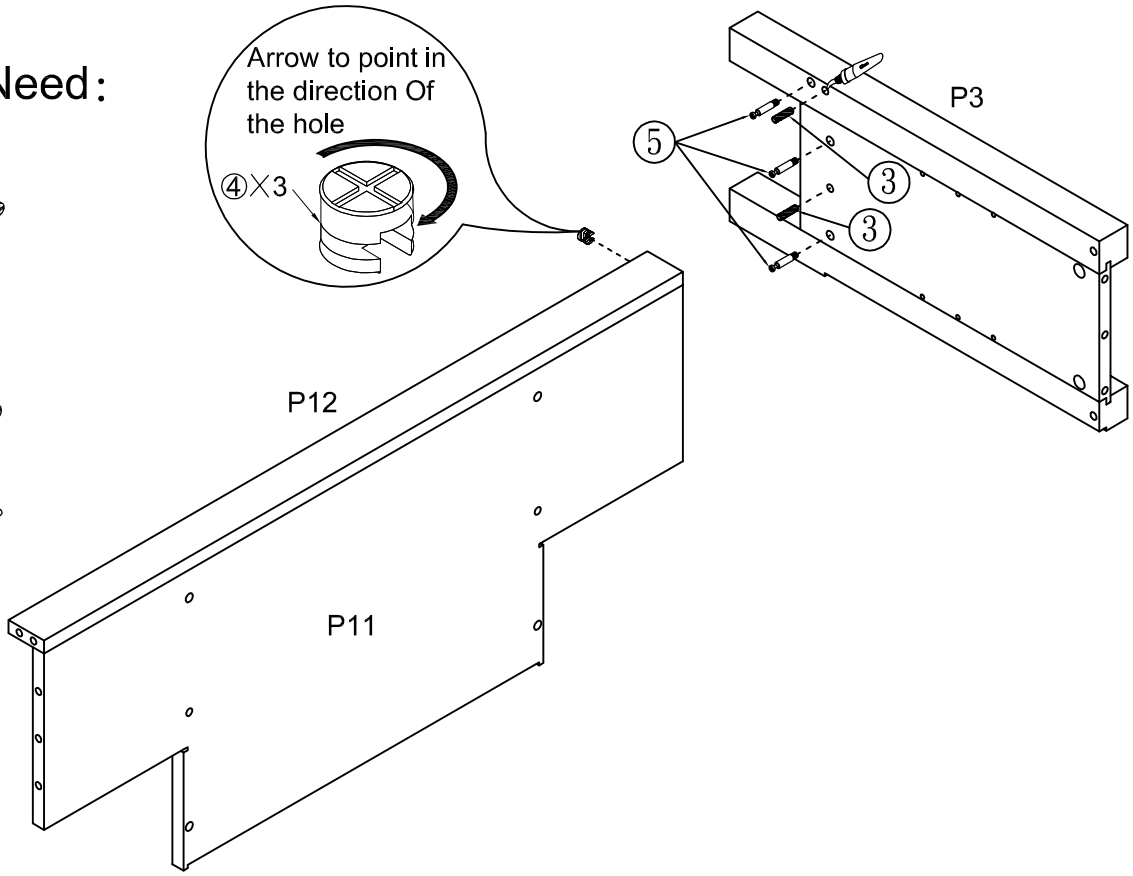

When inserting the cam nuts,rotate the cam nuts so the arrow points towards the incoming cam bolts.

STEP 3

You Will Need:

2*Cam Bolts (5)

2*Cam Nuts (4)

3*Dowels (3)

Glue (6)

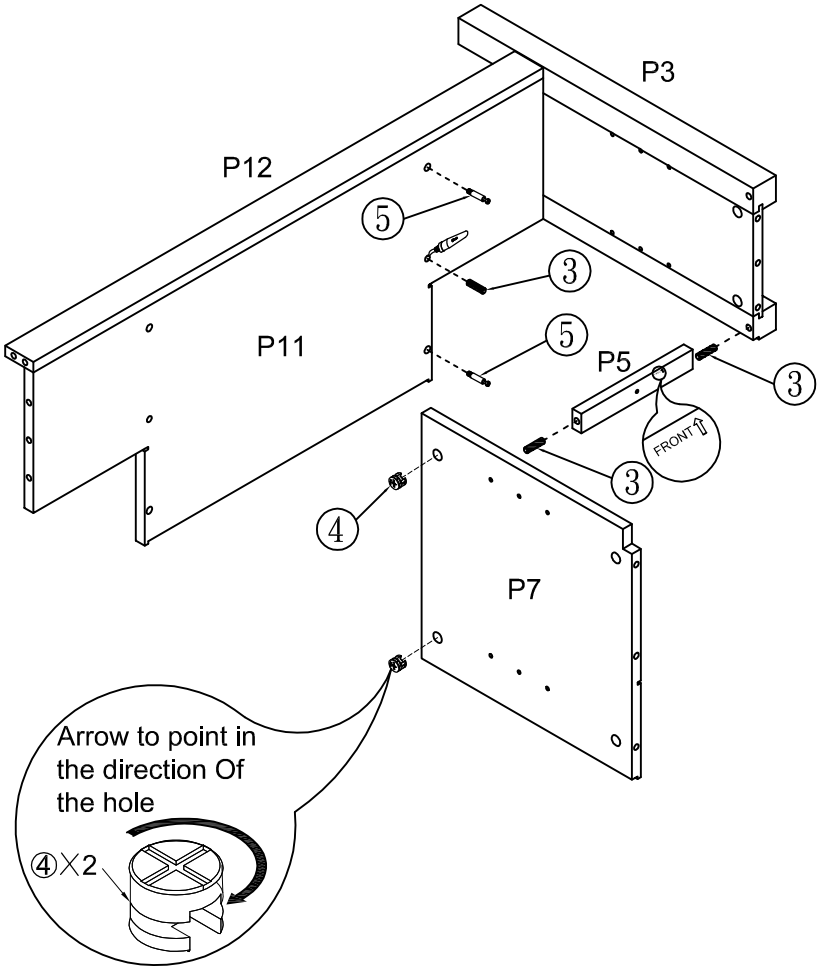

When inserting the cam nuts,rotate the cam nuts so the arrow points towards the incoming cam bolts.

STEP 4

You Will Need:

2*Cam Bolts (5)

2*Cam Nuts (4)

3*Dowels (3)

Glue (6)

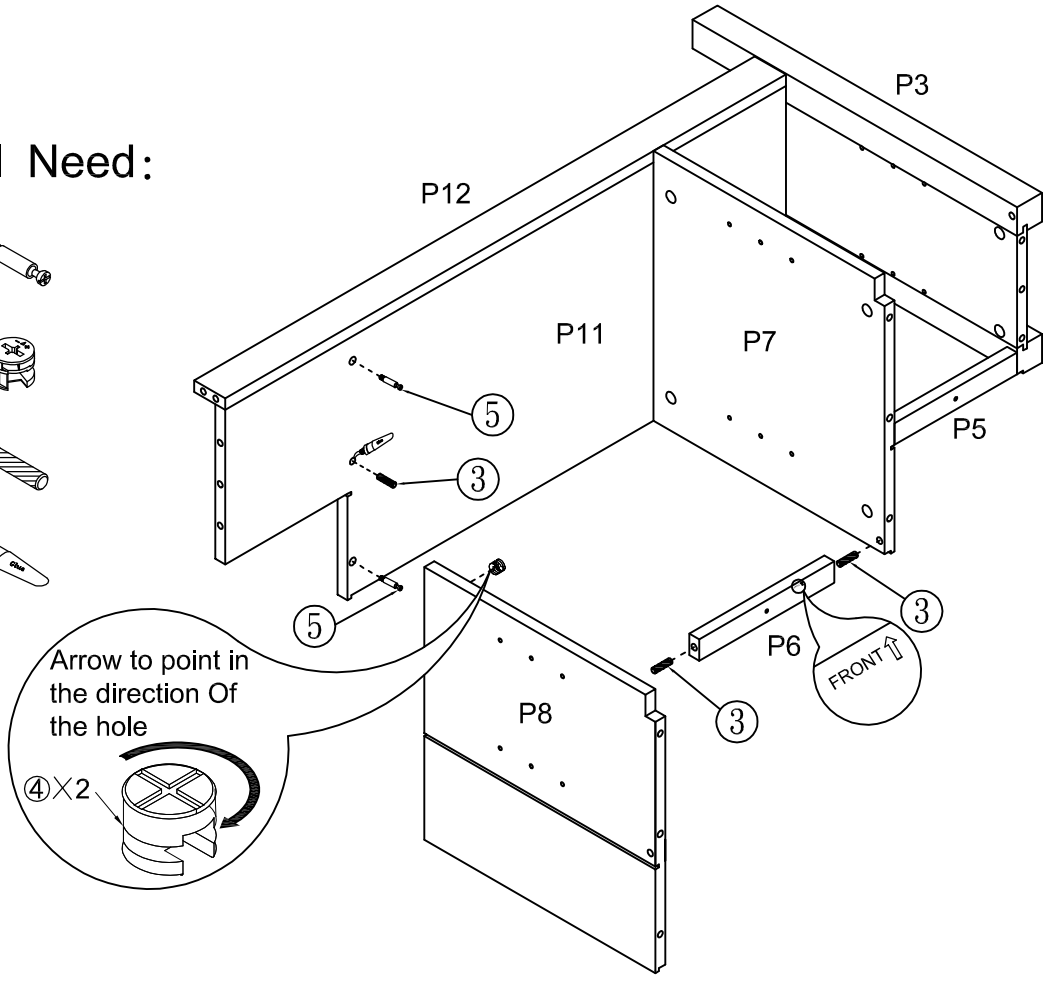

When inserting the cam nuts,rotate the cam nuts so the arrow points towards the incoming cam bolts.

STEP 5

You Will Need:

3*Cam Bolts (5)

3*Cam Nuts (4)

6*Dowels (3)

Glue (6)

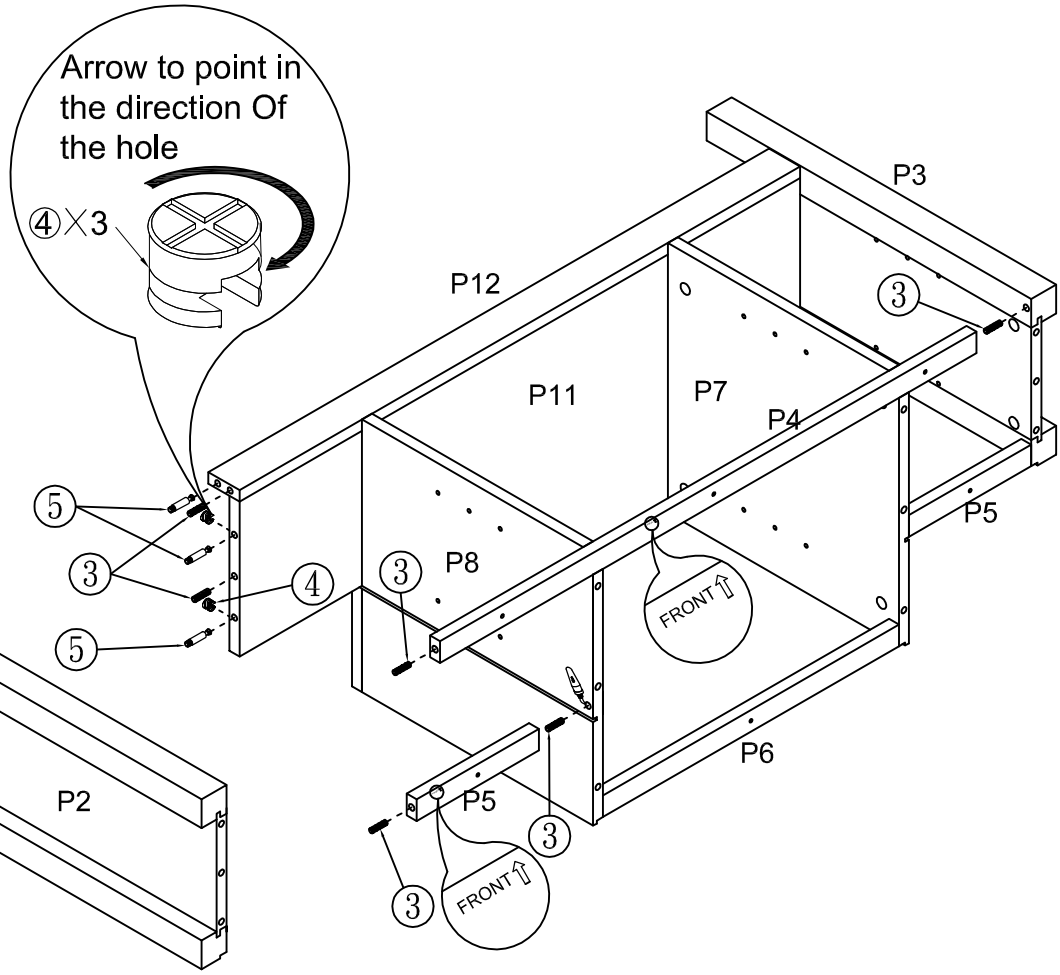

When inserting the cam nuts,rotate the cam nuts so the arrow points towards the incoming cam bolts.

STEP 6

You Will Need:

28*Panhand Screws(1)

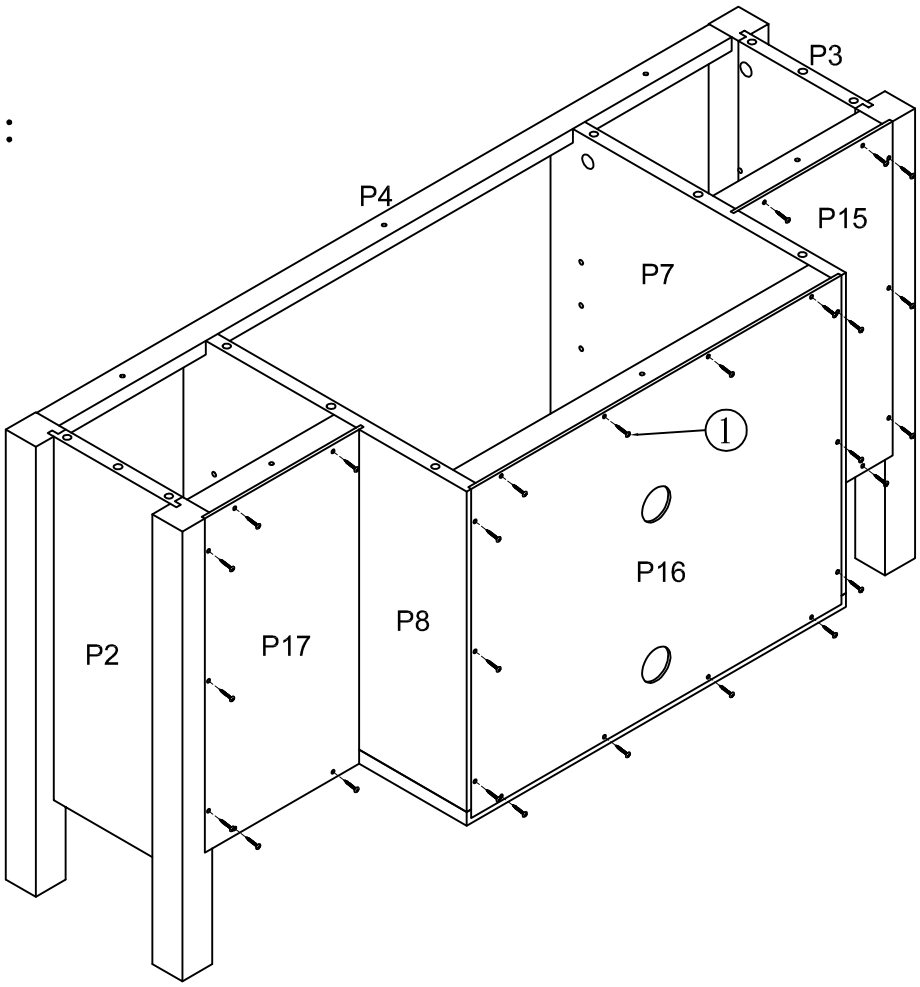

STEP 7

You Will Need:

8*Cam Bolts (5)

8*Cam Nuts (4)

4*Dowels (3)

6*Wood Screws(2)

Glue (6)

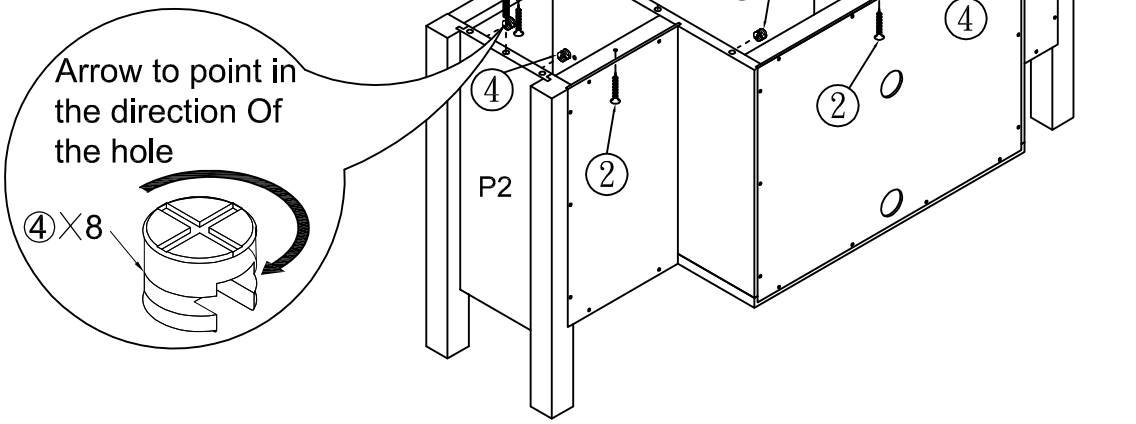

When inserting the cam nuts,rotate the cam nuts so the arrow points towards the incoming cam bolts.

STEP 8

You Will Need:
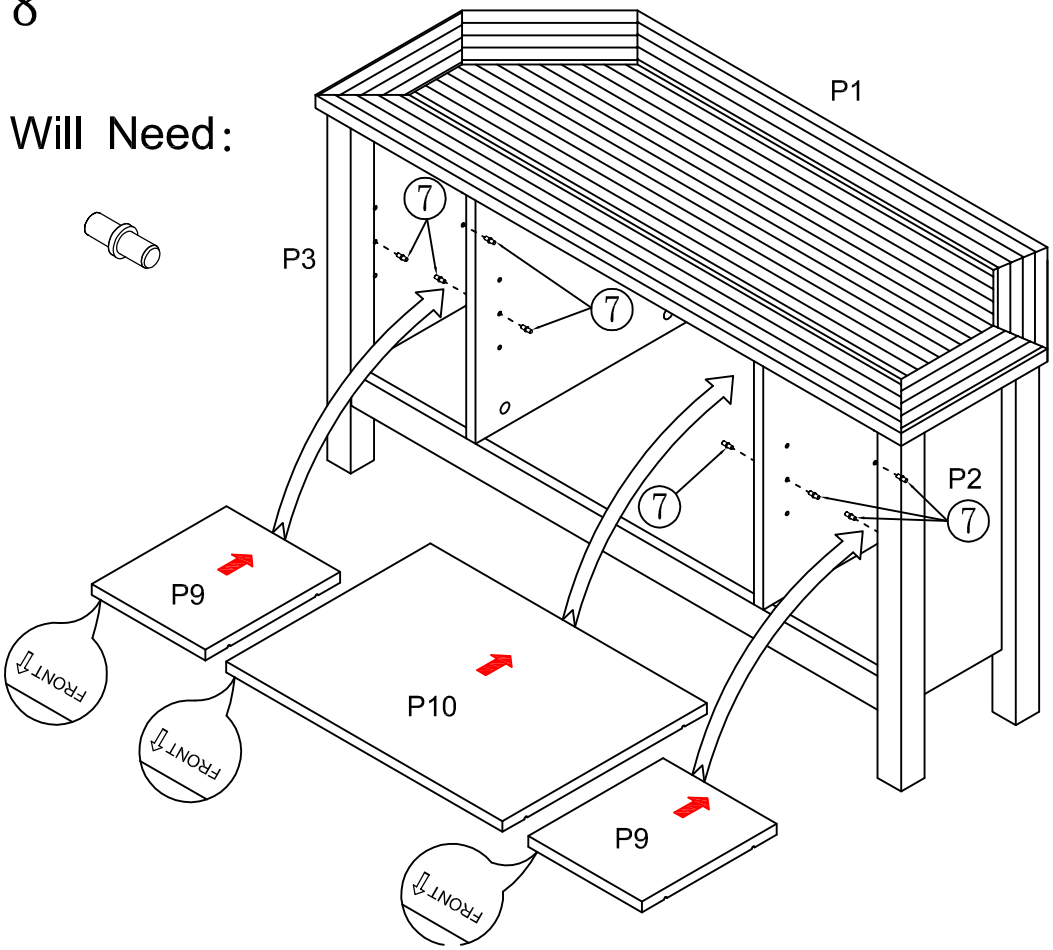
12*Shelf Pin(7)